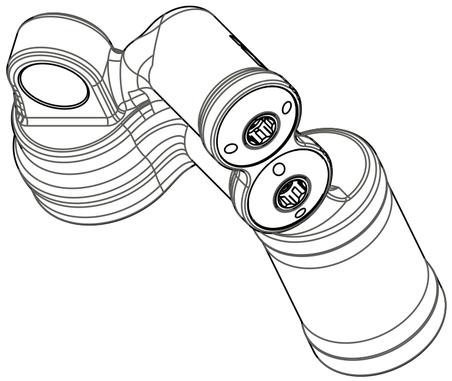

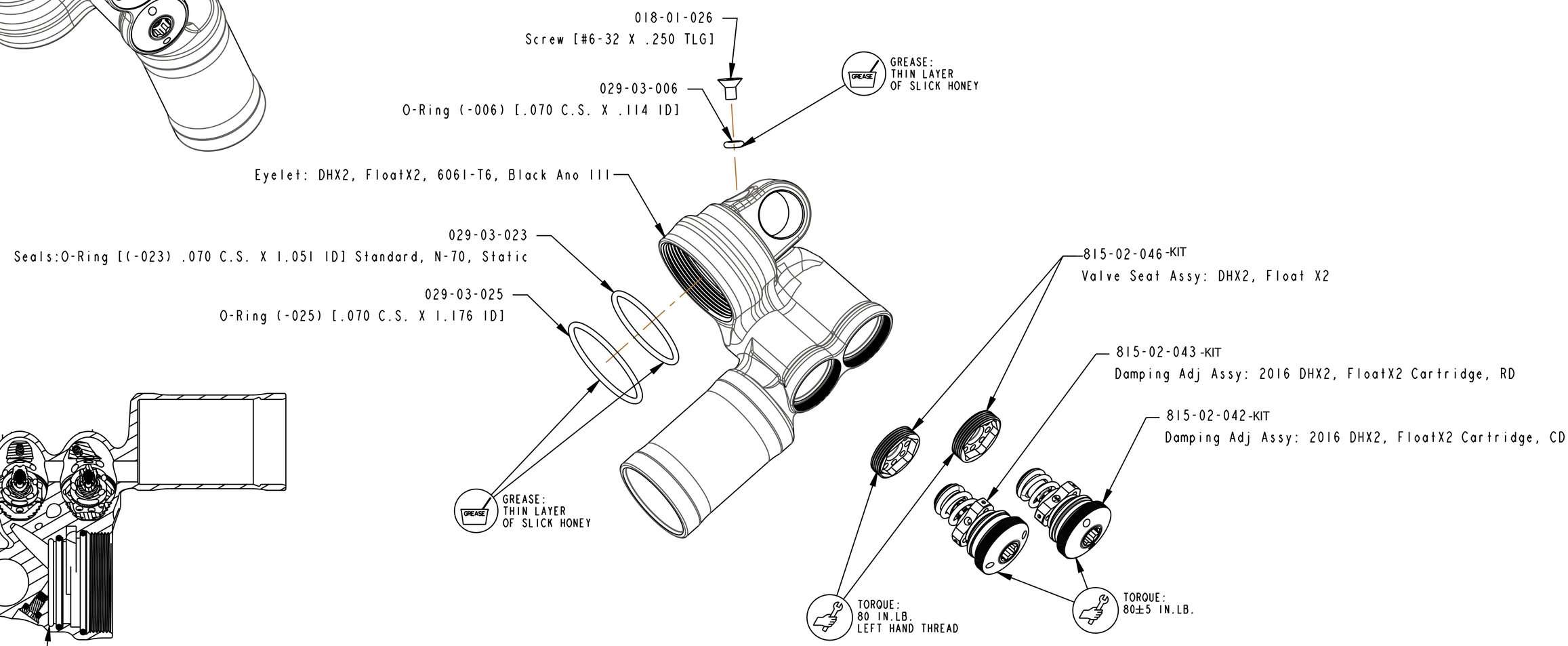

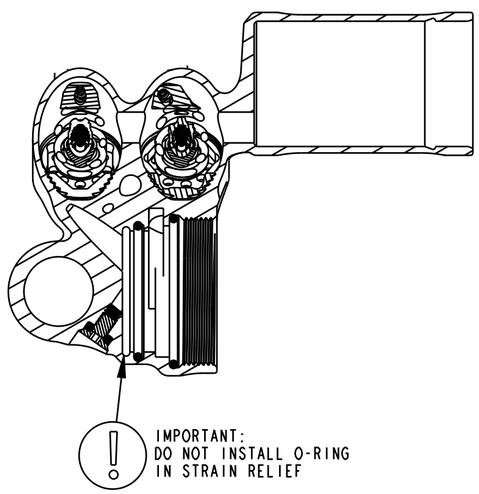

SECTION B-B

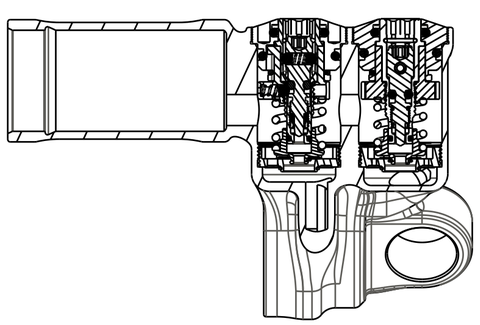

SECTION C-C

FOX Factory, Inc.
130 Hangar Way, Watsonville, CA 95076 USA
Ph 831-768-1100
Fax 831-768-9312

TITLE
Eyelet Assy:
F-S 2016 DHX2

SIZE C | DWG. NO. 808-17-183-KIT

PLOT SCALE 1.00:1 | SHEET 1 OF 1

ProE ASSEM