— PROPRIETARY —
THIS DOCUMENT CONTAINS CONFIDENTIAL, PROPRIETARY INFORMATION THAT IS FOX PROPERTY. DO NOT DISCLOSE TO OR DUPLICATE FOR OTHERS EXCEPT AS AUTHORIZED BY FOX.

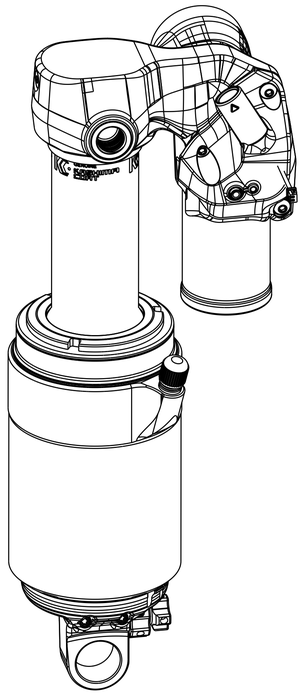

SCALE 1:1

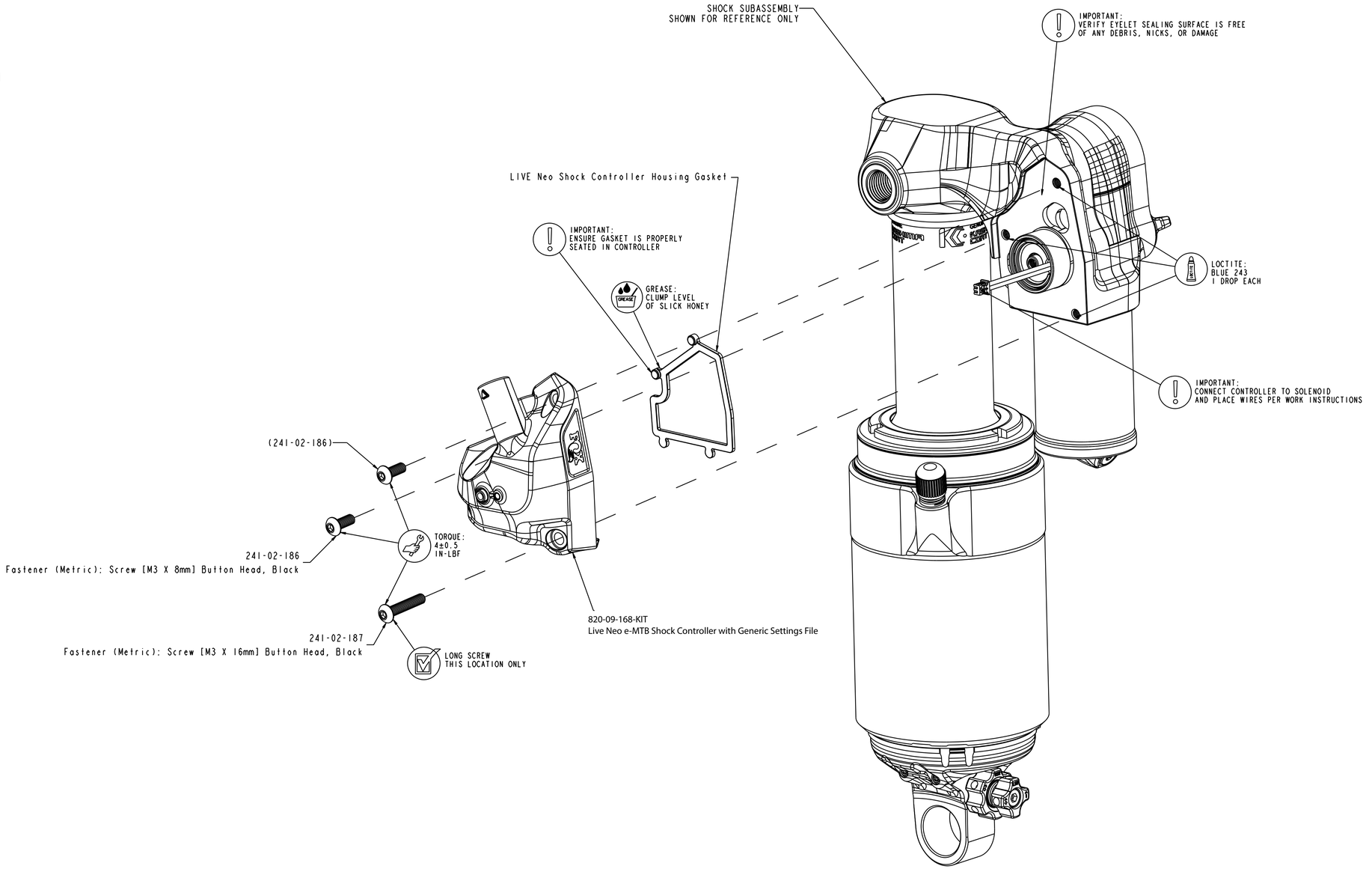

FOX Factory, Inc.
2055 Sugarloaf Circle, Suite 300
Duluth, Ga 30097 USA Phone 800-369-7469

TITLE
Assy Dwg: Controller Sub Assy, 2027 Live Valve Neo e-MTB, Shock

SIZE	DWG. NO.	REV
D	808-17-696-KIT	B

PLOT SCALE: 1.5:1 | SHEET: 1 OF 1