— PROPRIETARY —
THIS DOCUMENT CONTAINS CONFIDENTIAL, PROPRIETARY INFORMATION THAT IS FOX PROPERTY. DO NOT DISCLOSE TO OR DUPLICATE FOR OTHERS EXCEPT AS AUTHORIZED BY FOX.

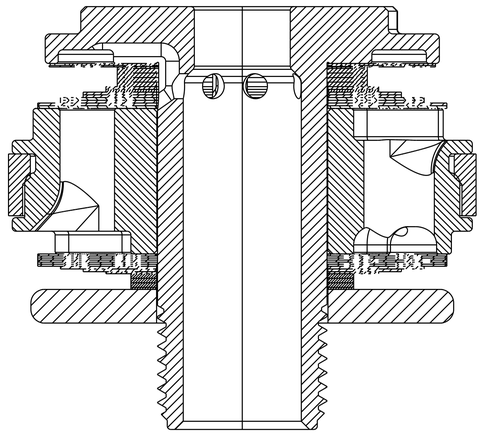

SECTION A-A
SCALE 6:1

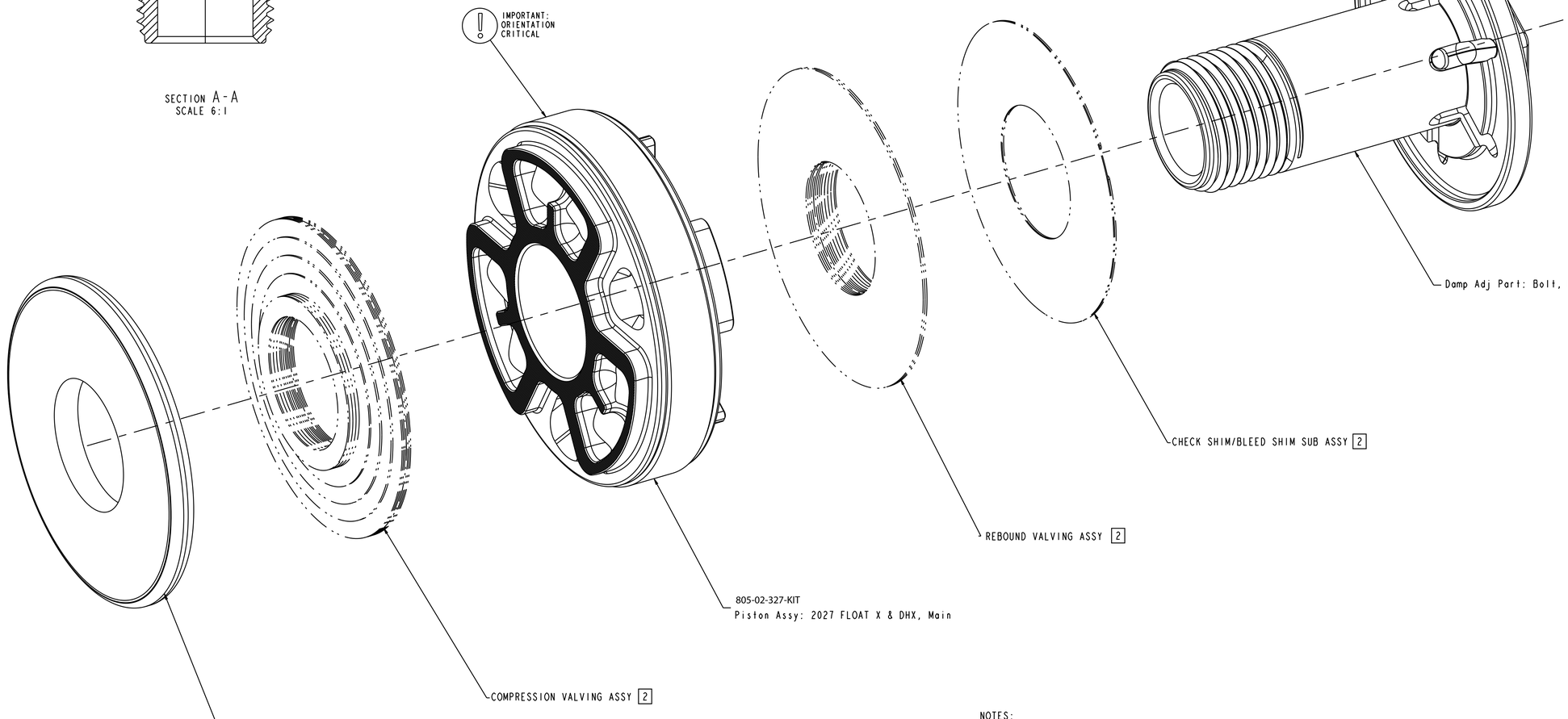

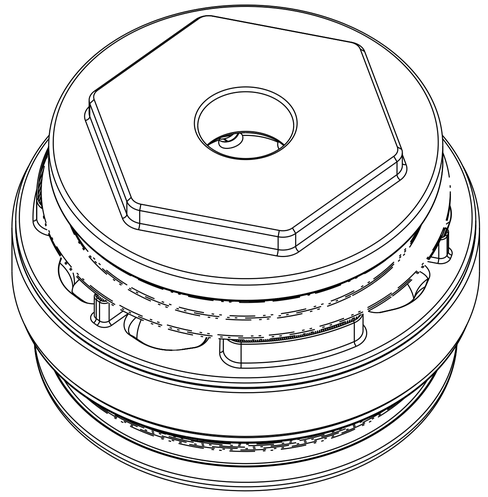

NOTES:

1. MATERIAL SEQUENCE NUMBERS FROM TOP LEVEL 900#.

[2] VALVING SHOWN FOR REFERENCE ONLY AND REPORT TO 900#.

FOX Factory, Inc.
2055 Sugarloaf Circle, Suite 300
Duluth, Ga 30097 USA Phone 800-369-7469

TITLE: Valving Assy: 2027 FLOAT X, Main Piston Parts

SIZE	DWG. NO.	REV
D	807-06-420-KIT	A

PLOT SCALE: 6:1 | SHEET: 1 OF 1