☐ PROPRIETARY ☐

THIS DOCUMENT CONTAINS CONFIDENTIAL, PROPRIETARY INFORMATION THAT IS FOX PROPERTY. DO NOT DISCLOSE TO OR DUPLICATE FOR OTHERS EXCEPT AS AUTHORIZED BY FOX.

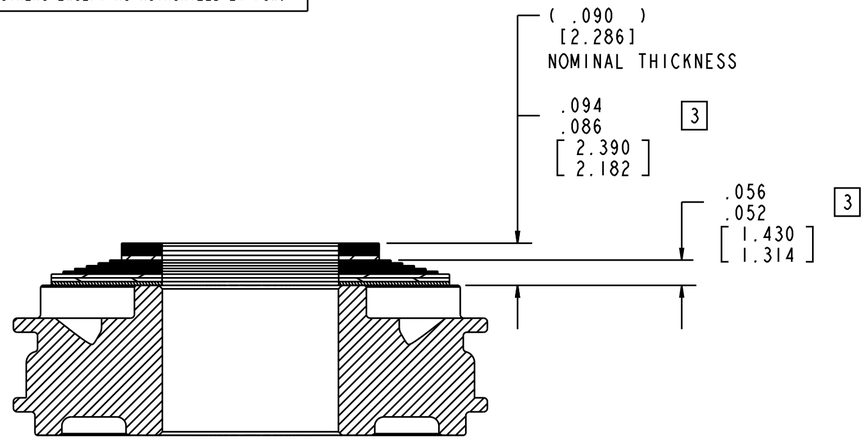

SECTION A-A
SCALE 4:1

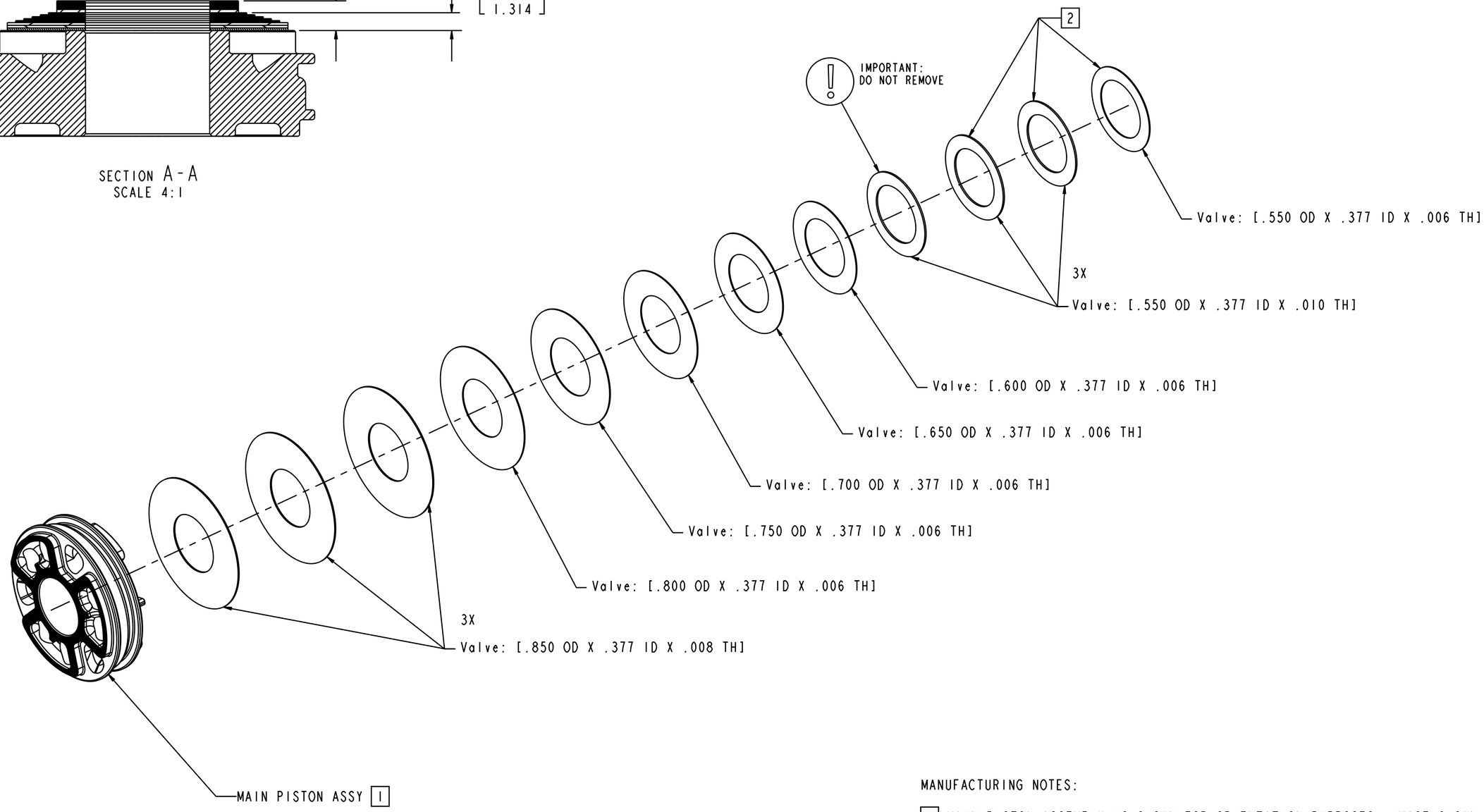

MANUFACTURING NOTES:

1. MAIN PISTON ASSEMBLY IS SHOWN FOR ORIENTATION PURPOSES. IMAGE SHOWN MAY NOT REPRESENT ACTUAL PART GEOMETRY.
2. INDICATED SPACERS MAY BE ADDED OR REMOVED TO ADJUST NUMBER OF REBOUND CLICKS.
3. DIMENSION IS APPLIED TO VALVE STACK AS SHOWN.

FOX Factory, Inc.
2055 Sugarloaf Circle, Suite 300
Duluth, Ga 30097 USA Phone 800-369-7469

TITLE
Valve Stack Assy: 2027 FLOAT X & DHX, RL80, Rebound Linear, .090 THK, .064 NMT

SIZE	DWG. NO.	REV
C	805-05-859-KIT	A

PLOT SCALE: 2:1 | SHEET: 1 OF 1