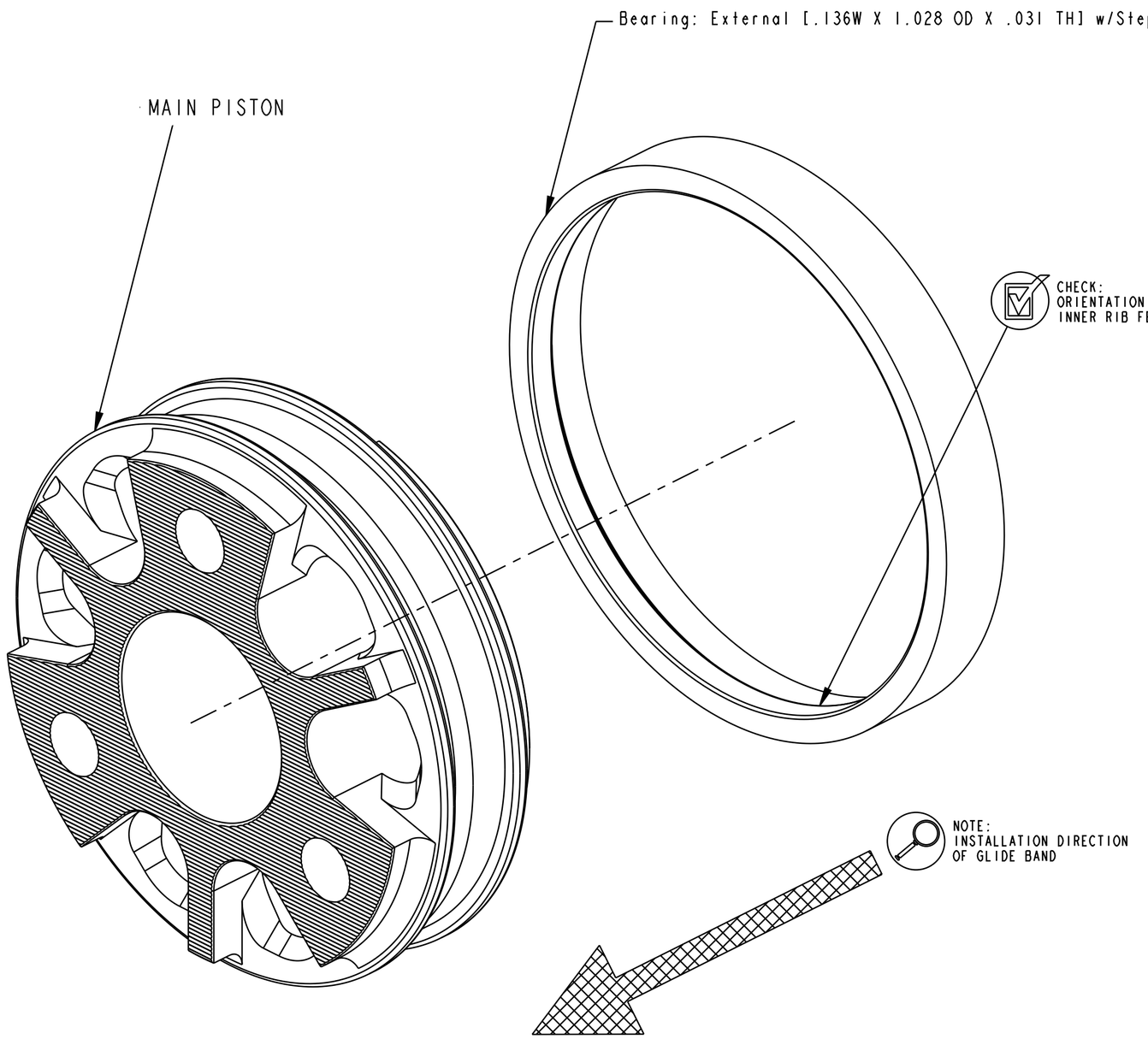

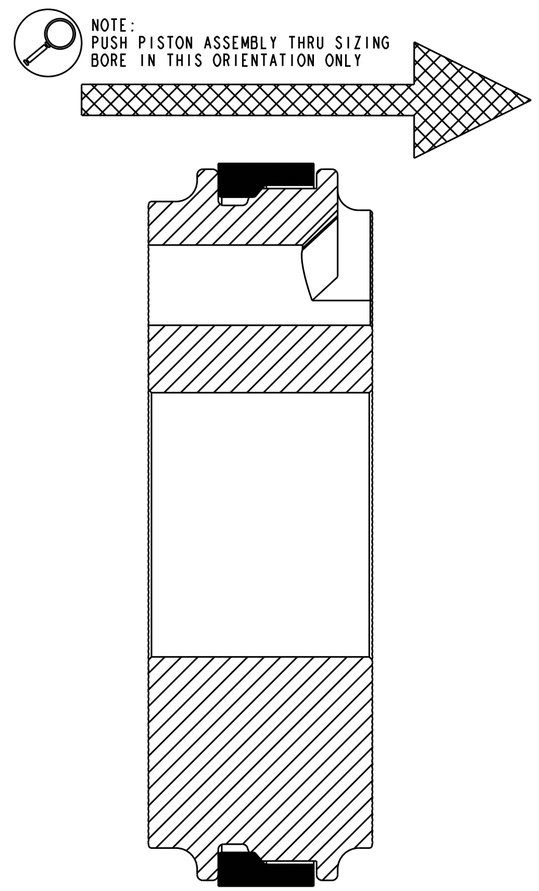

SECTION A-A

NOTES: (UNLESS OTHERWISE SPECIFIED)

1. IMPORTANT: AFTER INSTALLATION, GLIDE BAND MUST BE SIZED BEFORE USE IN SHOCK.

   SIZE TWICE IN FUNNEL STARTING AT ∅1.052 AND ENDING AT ∅1.015.

   SIZING FUNNEL FOX MFG PN: 399-91-073-034

2. DESIRED INSTALLED DIAMETER AFTER SIZING IS: (1.029-1.033 [26,14-26,24])

3. LIGHT RESIDUAL LUBRICATION IS ACCEPTABLE, DO NOT ADD ADDITIONAL LUBRICATION FOR SIZING OPERATION.

4. NO DEBRIS PERMITTED.

- PROPRIETARY -
THIS DOCUMENT CONTAINS CONFIDENTIAL, PROPRIETARY INFORMATION THAT IS FOX PROPERTY. DO NOT DISCLOSE TO OR DUPLICATE FOR OTHERS EXCEPT AS AUTHORIZED BY FOX.

FOX Factory, Inc.
130 Hangar Way, Watsonville, CA 95076 USA
Ph 831-768-1100
Fax 831-768-9312

TITLE

Piston Assy: 2027 FLOAT X & DHX, Main

SIZE	DWG. NO.	
C	805-02-327-KIT	
PLOT SCALE 6:1		SHEET 1 OF 1

ProE ASSEM