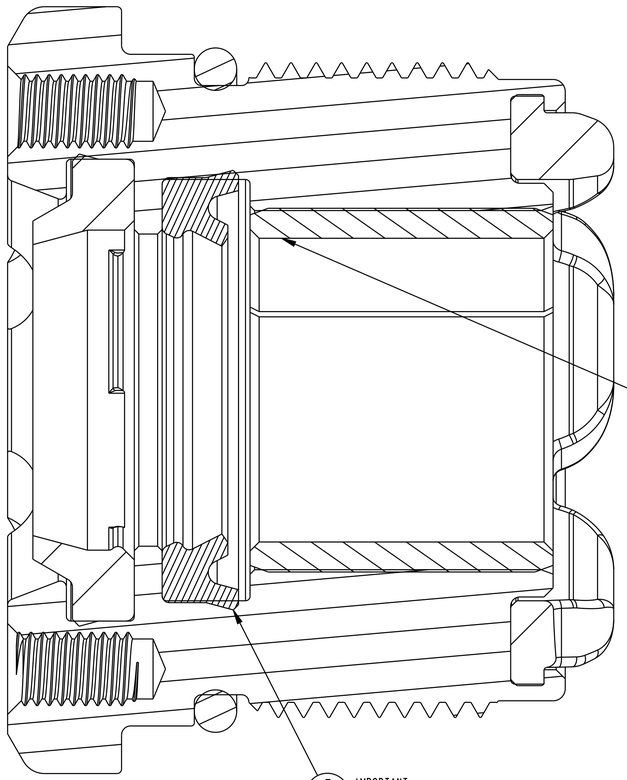

IMPORTANT:
NOTE ORIENTATION OF SEAL

IMPORTANT:
SIZE BUSHING AND 100% CHECK
WITH GO AND NO-GO PIN GAGES:

GO PIN GAGE: Ø.500
NO GO PIN GAGE: Ø.501

SECTION A-A
SCALE 8:1

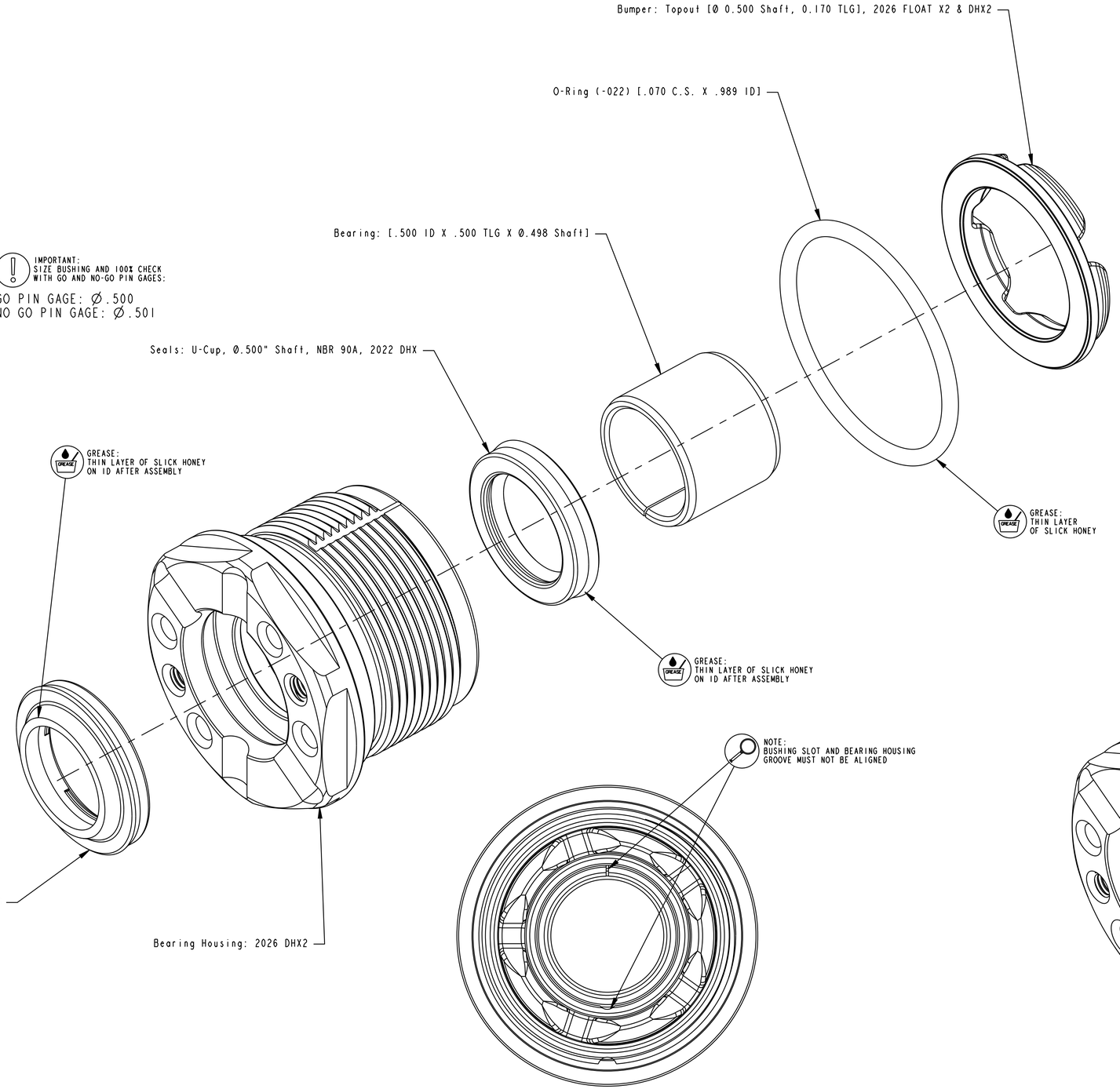

NOTE:
BUSHING SLOT AND BEARING HOUSING
GROOVE MUST NOT BE ALIGNED

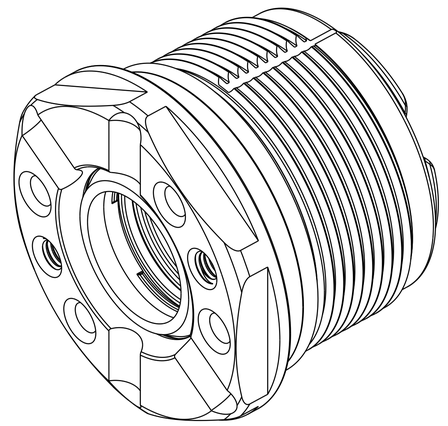

- PROPRIETARY -
THIS DOCUMENT CONTAINS CONFIDENTIAL, PROPRIETARY INFORMATION
THAT IS FOX PROPERTY. DO NOT DISCLOSE TO OR DUPLICATE
FOR OTHERS EXCEPT AS AUTHORIZED BY FOX.

FOX Factory, Inc.
130 Hangar Way, Watsonville, CA 95076 USA
Ph 831-768-1100
Fax 831-768-9312

TITLE: Bearing Housing Assy:
2027 DHX

SIZE	DWG. NO.	REV
D	812-06-130-KIT	

PLOT SCALE 4:1 | SHEET 1 OF 1