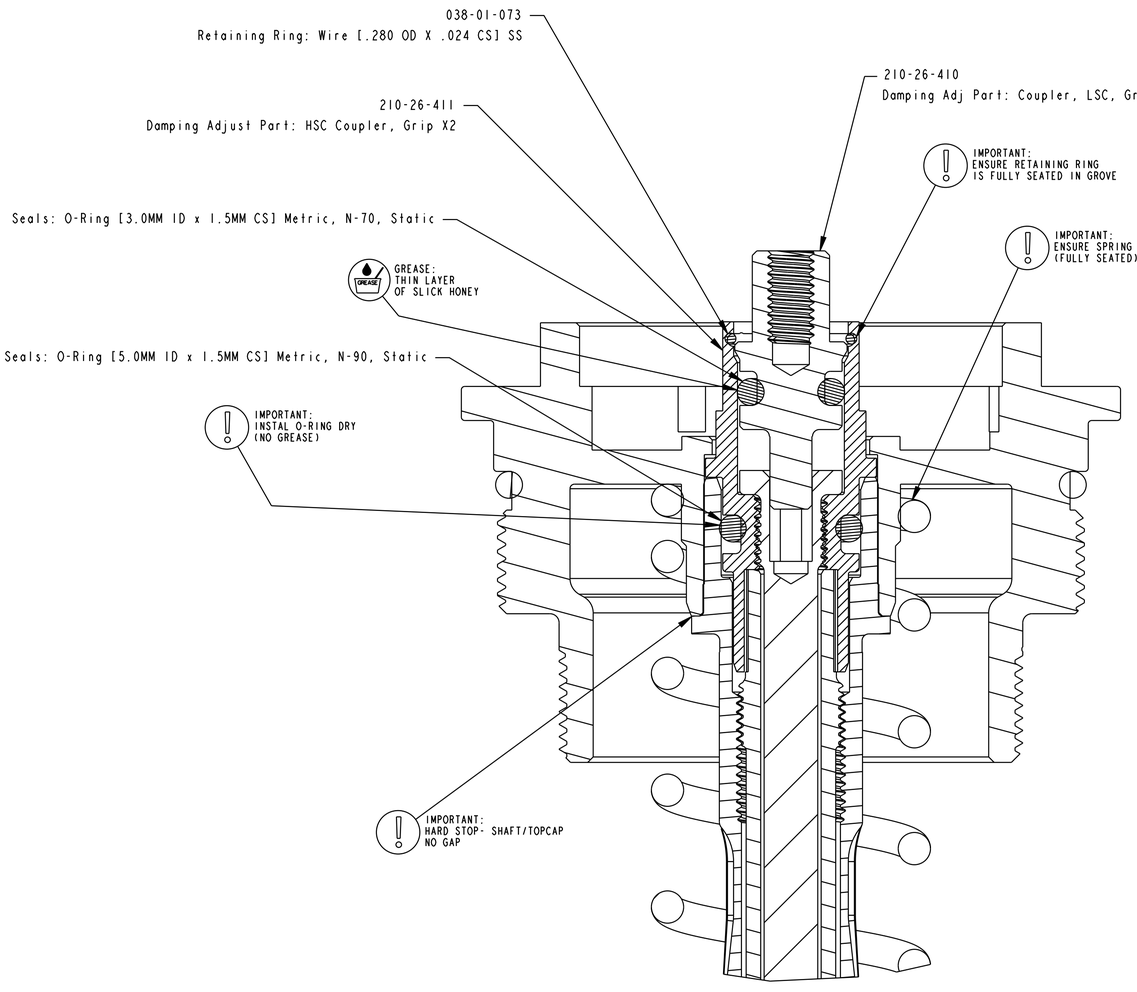

DETAIL Z
SCALE 6:1

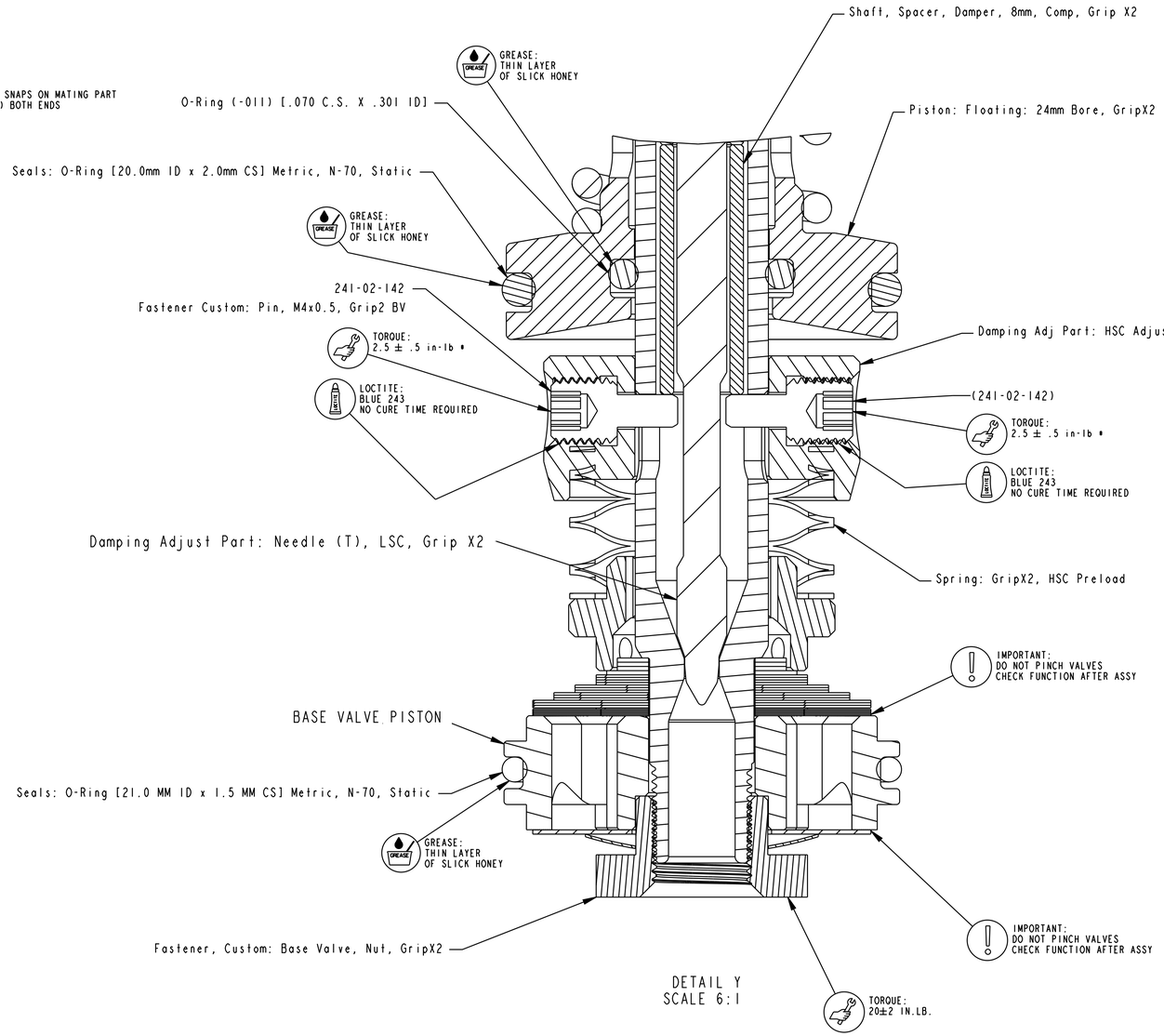

DETAIL Y
SCALE 6:1

— PROPRIETARY —
THIS DOCUMENT CONTAINS CONFIDENTIAL, PROPRIETARY INFORMATION
THAT IS FOX PROPERTY. DO NOT DISCLOSE TO OR DUPLICATE
FOR OTHERS EXCEPT AS AUTHORIZED BY FOX.

SIZE	CAGE NO.	DWG. NO.	REV.
D	NONE	820-05-838-KIT	
PLOT SCALE 2:1	INCHES	SHEET 2 OF 3	