— PROPRIETARY —
THIS DOCUMENT CONTAINS CONFIDENTIAL, PROPRIETARY INFORMATION THAT IS FOX PROPERTY. DO NOT DISCLOSE TO OR DUPLICATE FOR OTHERS EXCEPT AS AUTHORIZED BY FOX.

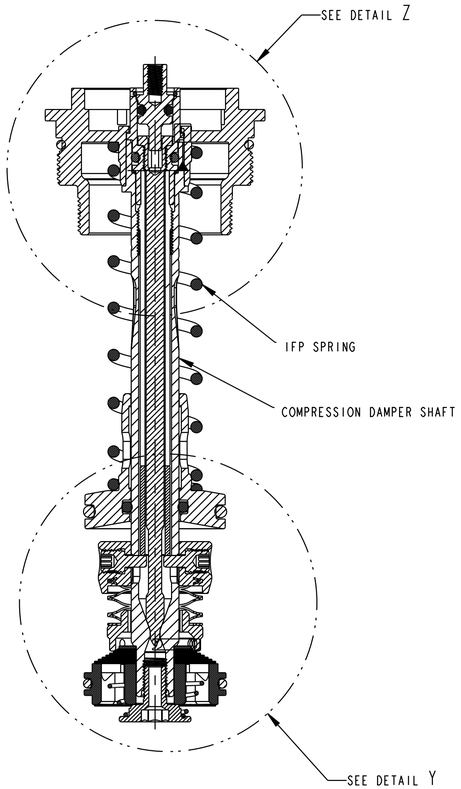

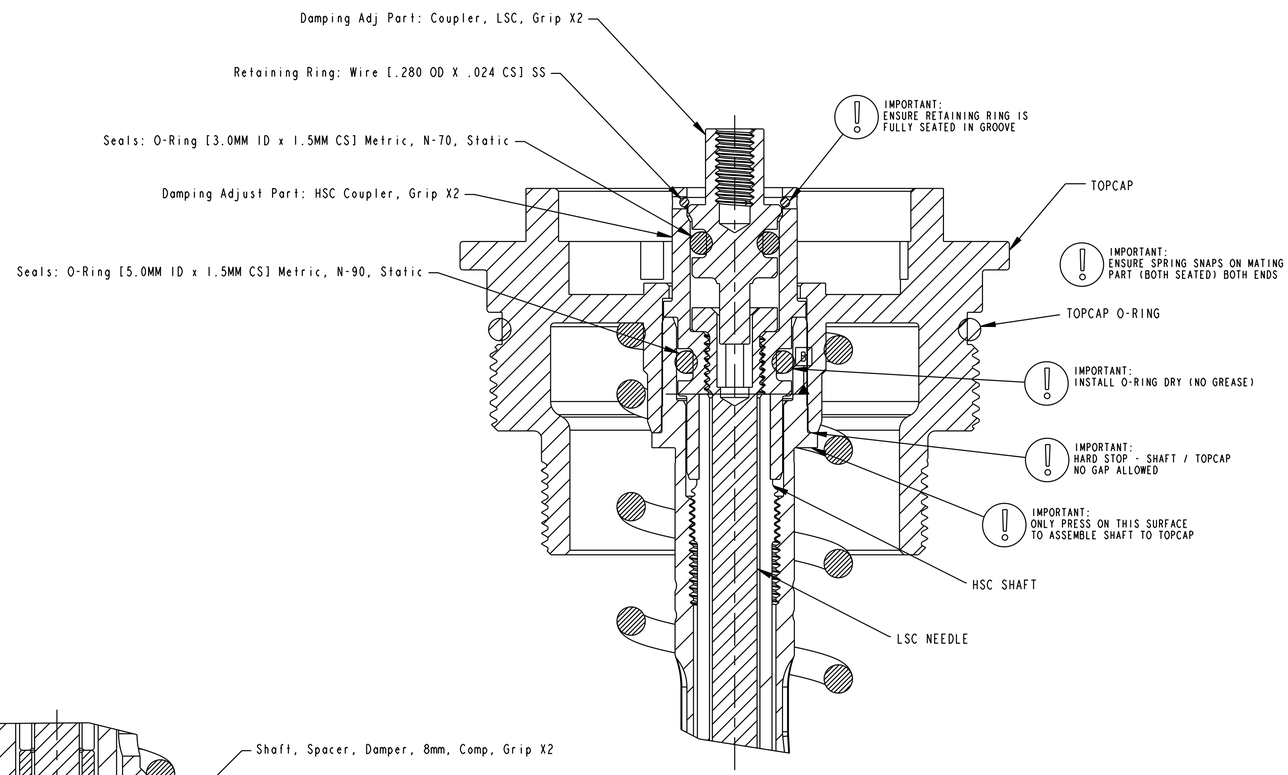

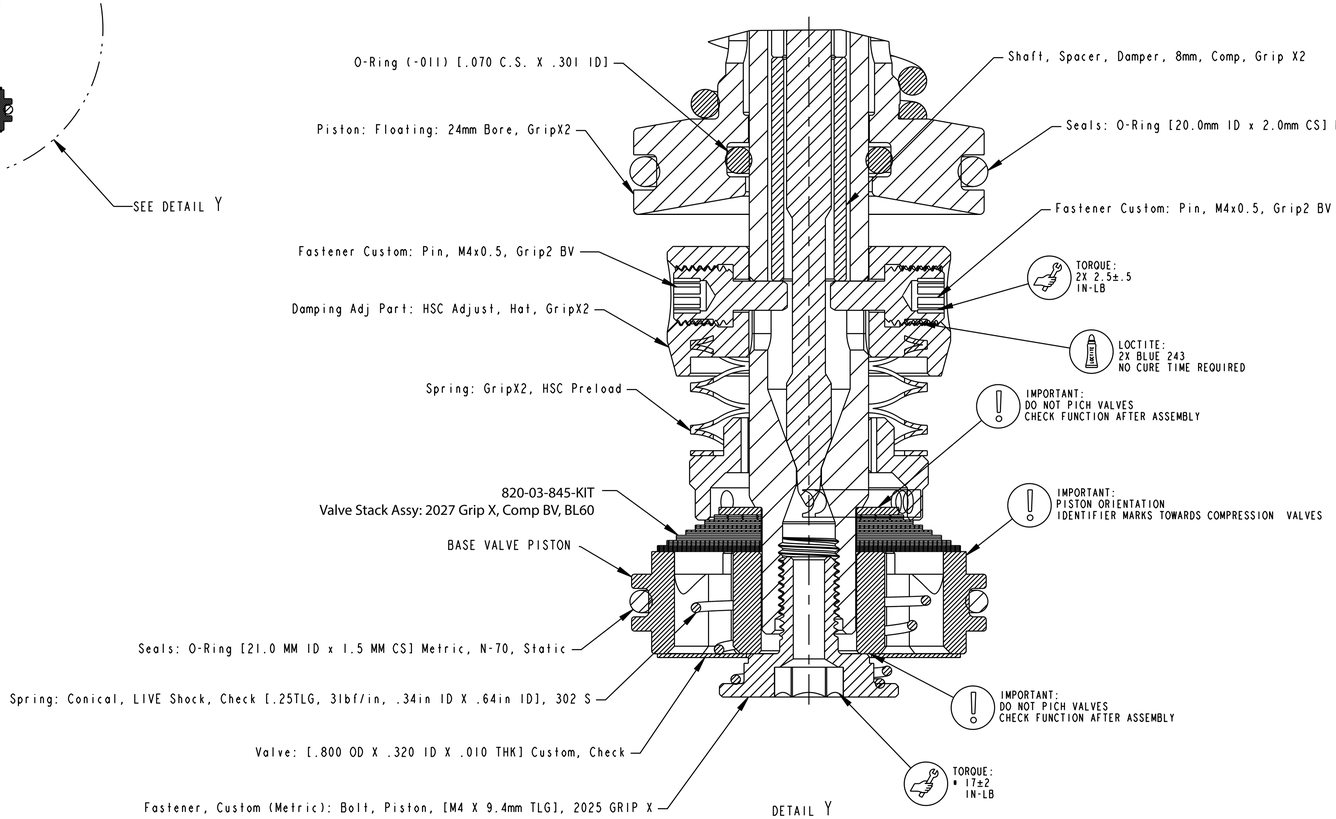

DETAIL Y
SCALE 5:1

FOX Factory, Inc.
2055 Sugarloaf Circle, Suite 300
Duluth, Ga 30097 USA Phone 800-369-7469

TITLE: 2027 38 190, GRIP X, Topcap Assy

SIZE	DWG. NO.	REV
D	820-05-835-KIT	A

PLOT SCALE: 2:1 | SHEET: 1 OF 2