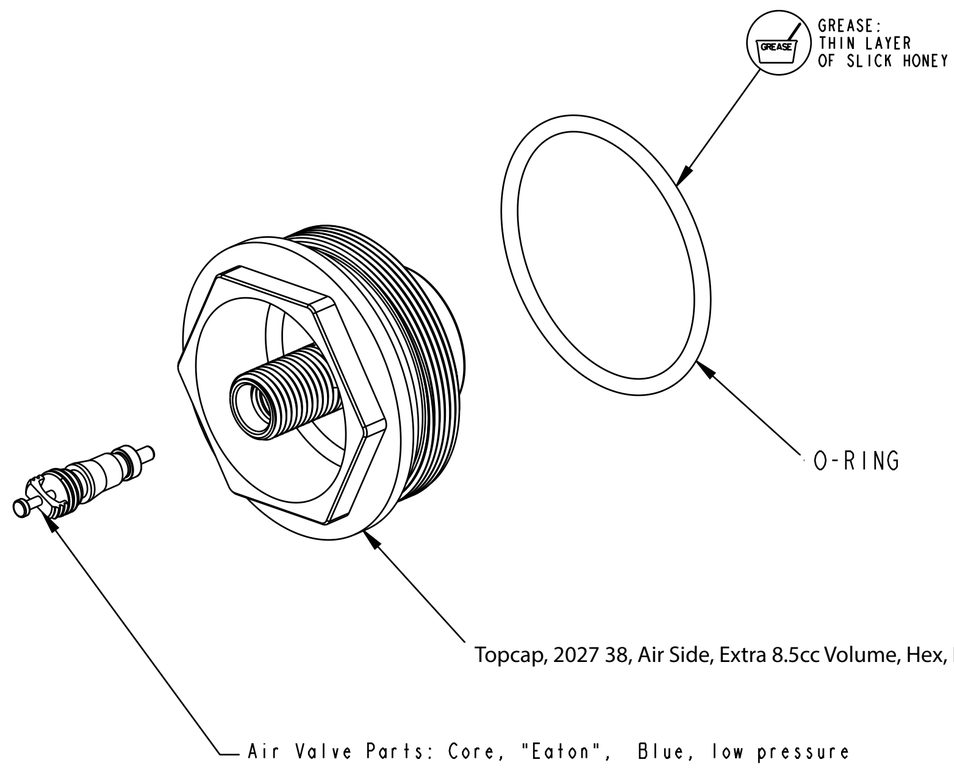

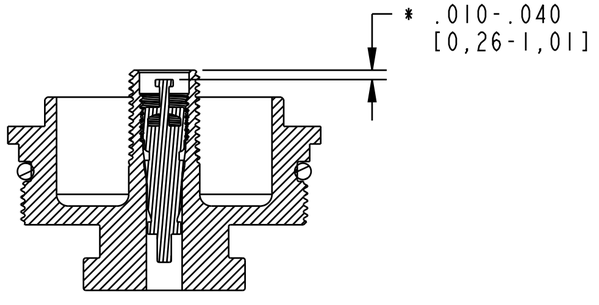

SECTION A-A

- PROPRIETARY -
THIS DOCUMENT CONTAINS CONFIDENTIAL, PROPRIETARY INFORMATION
THAT IS FOX PROPERTY. DO NOT DISCLOSE TO OR DUPLICATE
FOR OTHERS EXCEPT AS AUTHORIZED BY FOX.

FOX Factory, Inc.
130 Hangar Way, Watsonville, CA 95076 USA
Ph 831-768-1100
Fax 831-768-9312

TITLE
Topcap Assy, 2027 FLOAT, 38, Black, Extra Volume, Hex

SIZE	DWG. NO.	
C	820-05-826-KIT	
PLOT SCALE 2.00:1		SHEET 1 OF 1

ProE ASSEM