— PROPRIETARY —
THIS DOCUMENT CONTAINS CONFIDENTIAL, PROPRIETARY INFORMATION THAT IS FOX PROPERTY. DO NOT DISCLOSE TO OR DUPLICATE FOR OTHERS EXCEPT AS AUTHORIZED BY FOX.

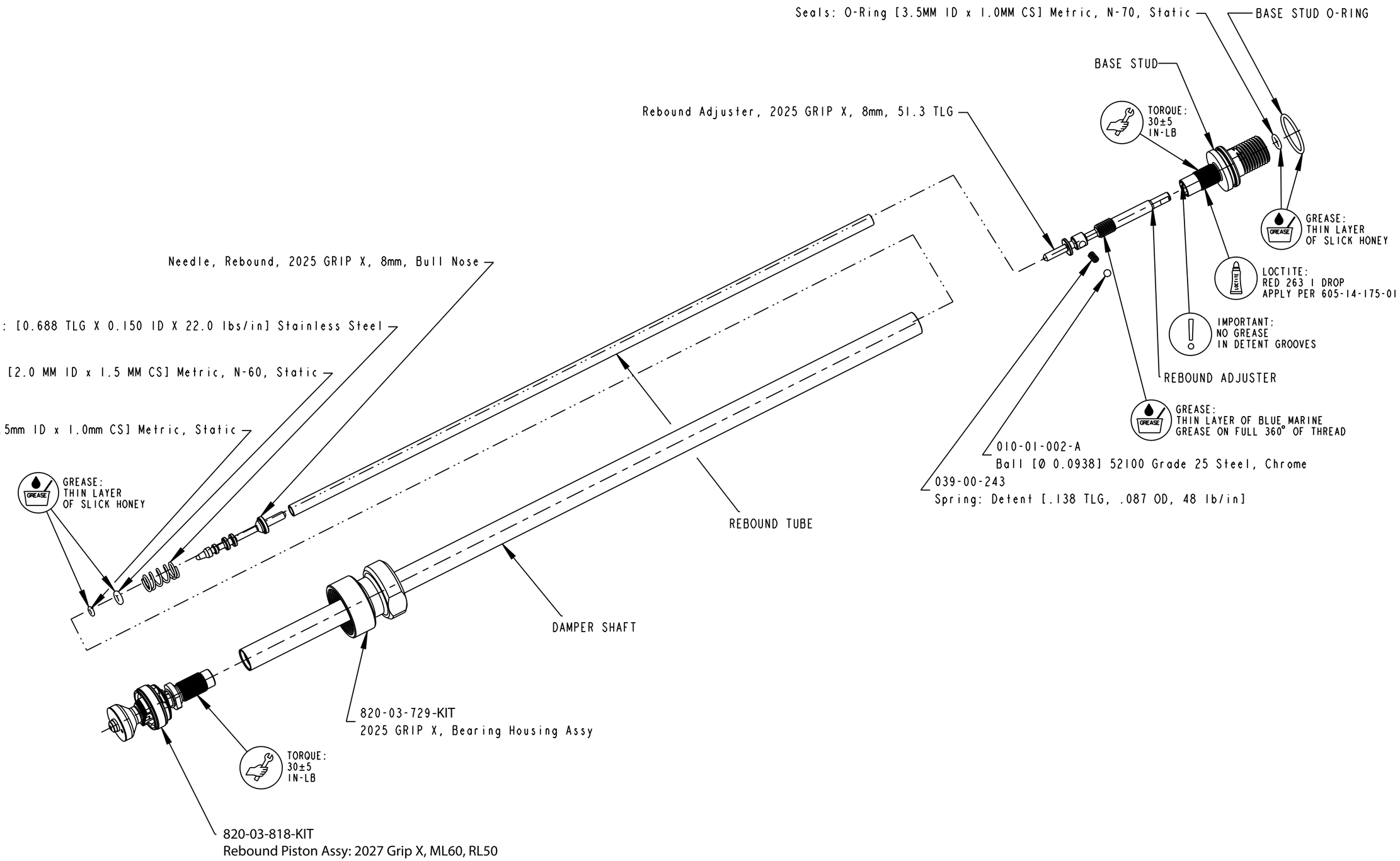


FOX Factory, Inc.
2055 Sugarloaf Circle, Suite 300
Duluth, Ga 30097 USA Phone 800-369-7469

TITLE
# 2027 38 190, GRIP X LSR Damper Shaft Assy

| SIZE | DWG. NO. | REV |
|---|---|---|
| C | 820-03-819-KIT | |

PLOT SCALE: 1:1 | SHEET: 1 OF 1