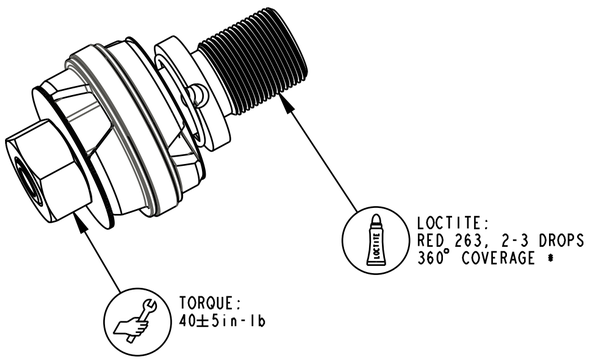

DETAIL Z
SCALE 2:1

820-03-750-KIT
2025 Grip Rebound Piston Assy

820-03-525-KIT
2019 Grip, All, Bearing Housing Assy

APPLY **UltraPlex LT2** GREASE TO THREADS ON ALUMINUM REBOUND NEEDLES ONLY

BASE STUD

O-RING

DAMPER SHAFT

TORQUE:
40±5in-lb

LOCTITE:
RED 263, 2-3 DROPS
360° COVERAGE

Ball [Ø.1094]

Spring: Detent [.138 TLG, .087 OD, 48 lb/in]

REBOUND NEEDLE

SEE DETAIL Z

O-Ring (-005) [.070 C.S. X 0.101 ID]

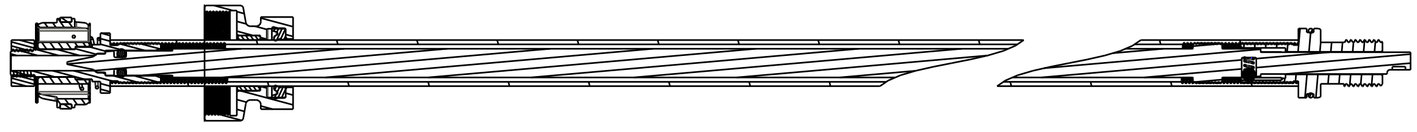

SECTION A-A

- PROPRIETARY -
THIS DOCUMENT CONTAINS CONFIDENTIAL, PROPRIETARY INFORMATION
THAT IS FOX PROPERTY. DO NOT DISCLOSE TO OR DUPLICATE
FOR OTHERS EXCEPT AS AUTHORIZED BY FOX.

FOX Factory, Inc.
130 Hangar Way, Watsonville, CA 95076 USA
Ph 831-768-1100
Fax 831-768-9312

TITLE
2026 38, 190 MAX, Marzocchi Bomber Z, Grip Damper Shaft Assy

SIZE	DWG. NO.	
C	820-03-757-KIT	
PLOT SCALE 1:1		SHEET 1 OF 1