— PROPRIETARY —
THIS DOCUMENT CONTAINS CONFIDENTIAL, PROPRIETARY INFORMATION THAT IS FOX PROPERTY. DO NOT DISCLOSE TO OR DUPLICATE FOR OTHERS EXCEPT AS AUTHORIZED BY FOX.

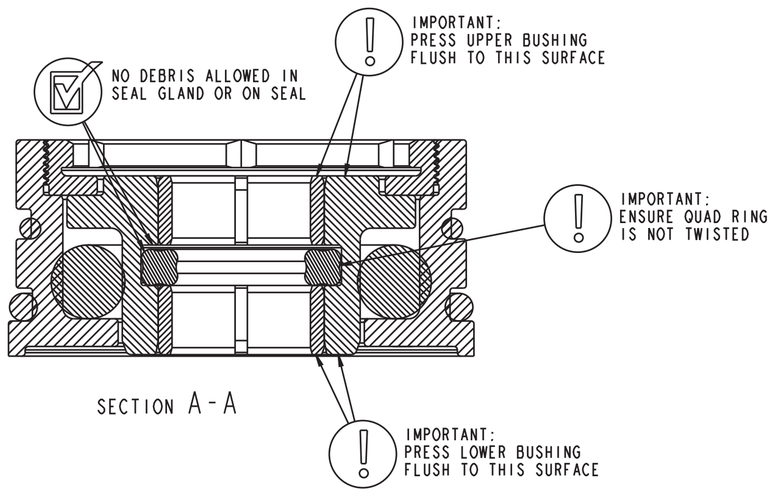

SECTION A-A

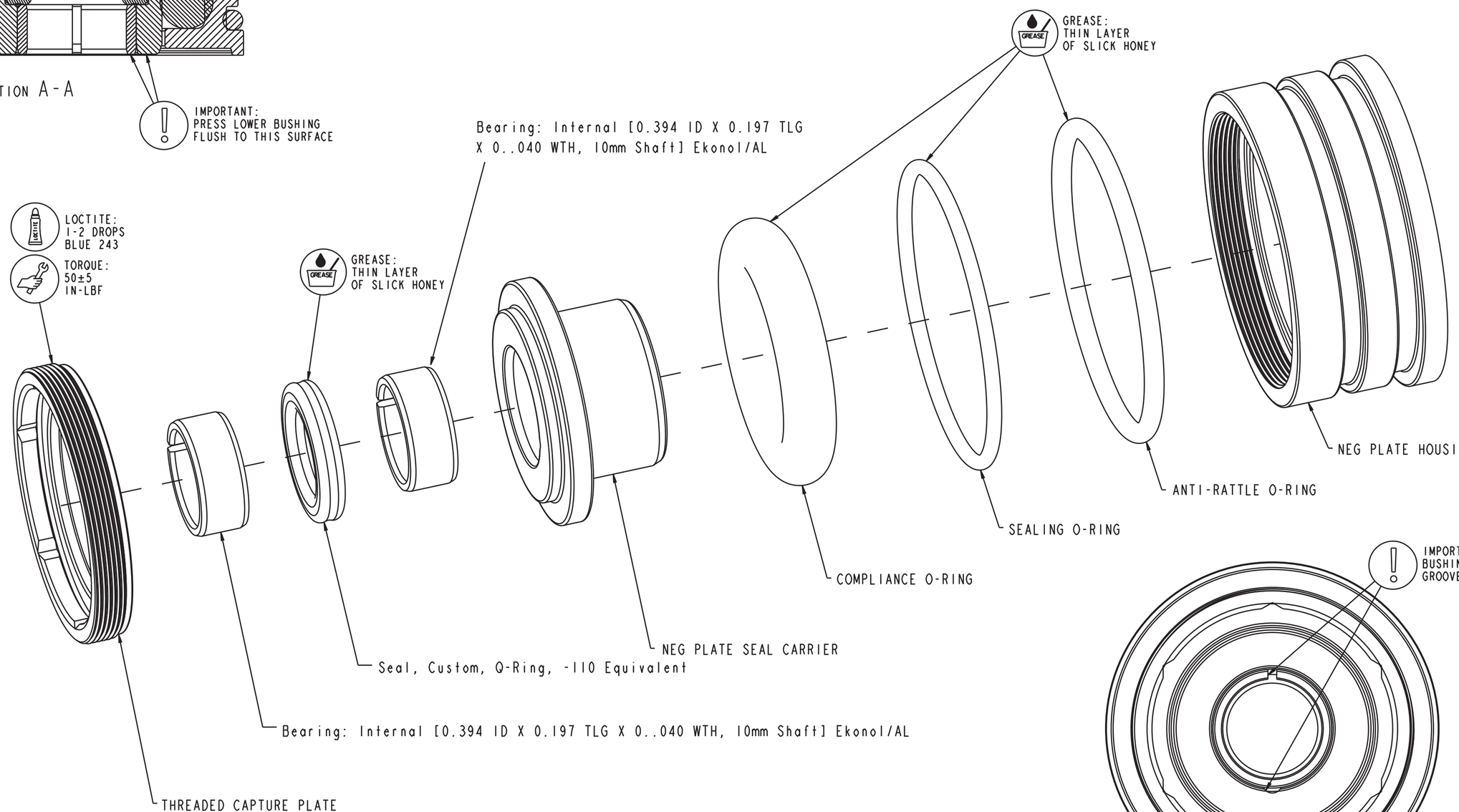

FOX Factory, Inc.
2055 Sugarloaf Circle, Suite 300
Duluth, Ga 30097 USA Phone 800-369-7469

TITLE
Neg Plate Subassembly, 2027 38 FLOAT NA 3 Glidecore, All Travel, 1.345" Bore, MCU

SIZE	DWG. NO.	REV
C	820-02-748-KIT	B

PLOT SCALE: 3:1 | SHEET: 1 OF 1