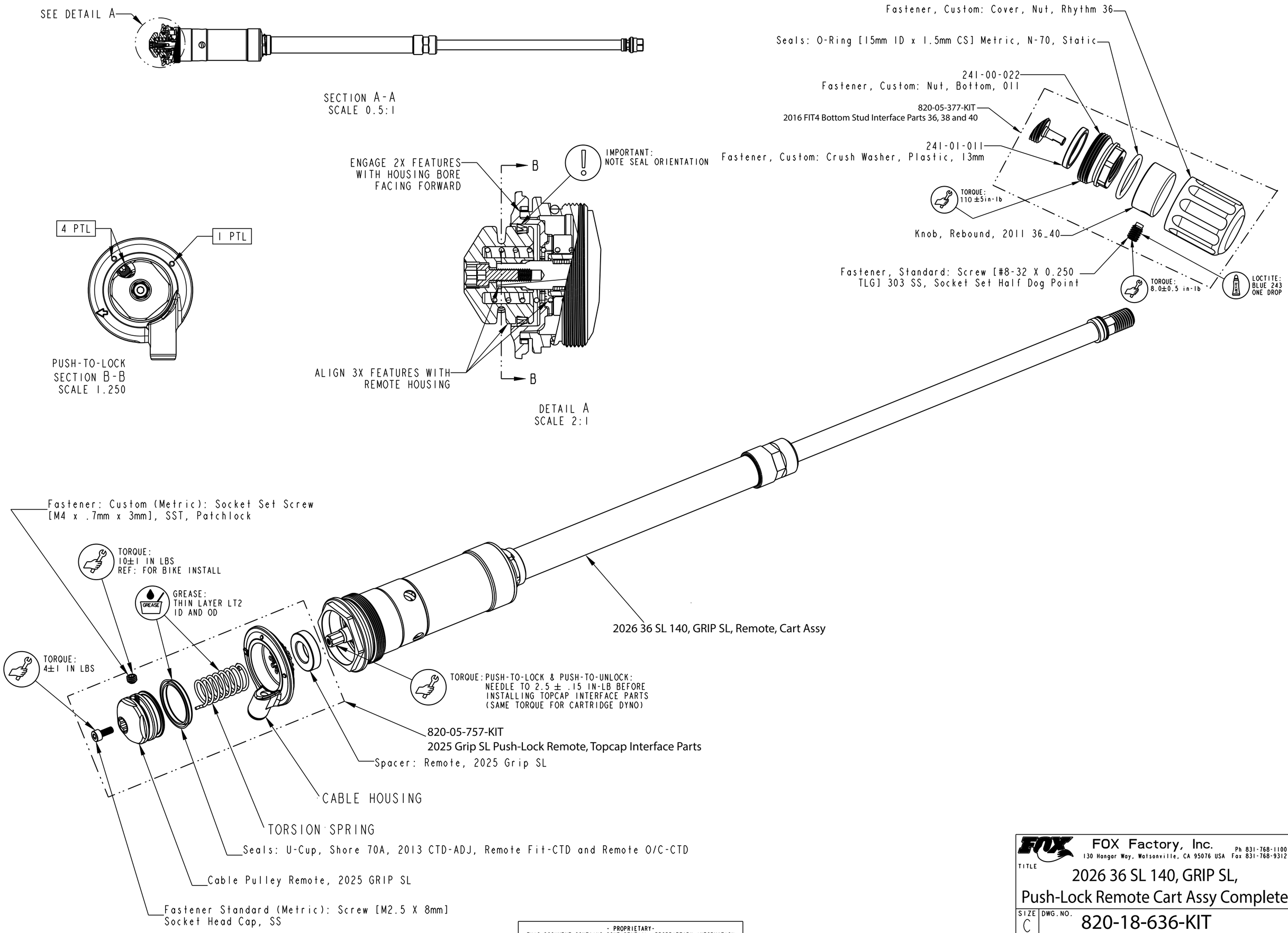

- PROPRIETARY -
THIS DOCUMENT CONTAINS CONFIDENTIAL, PROPRIETARY INFORMATION THAT IS FOX PROPERTY. DO NOT DISCLOSE TO OR DUPLICATE FOR OTHERS EXCEPT AS AUTHORIZED BY FOX.

FOX Factory, Inc.
130 Hangar Way, Watsonville, CA 95076 USA
Ph 831-768-1100
Fax 831-768-9312

TITLE
2026 36 SL 140, GRIP SL,
Push-Lock Remote Cart Assy Complete

SIZE C | DWG. NO. 820-18-636-KIT

PLOT SCALE 1:1 | SHEET 1 OF 1

ProE ASSEM