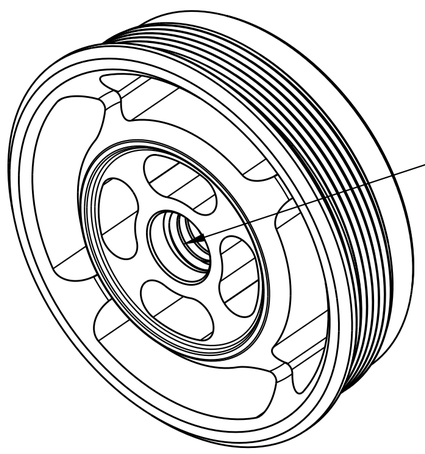

DETAIL Y
SCALE 4:1

IMPORTANT:
APPLY TO THREADS BELOW COUNTERBORE ONLY
NO LOCTITE ON VALVE SEALING SURFACES

LOCTITE:
PRIMER 7649 TO ENTIRE PART
LET DRY 30 SECONDS

LOCTITE:
RED 263
1-2 DROPS

TORQUE:
55±5 IN.LB.

Valve: Metric [22.23mm OD X 13.72mm ID X 0.25mm THK]

TORQUE:
55±5 IN.LB.

Damping Adj Part: 2025, Coupler, Base Valve, GRIP SL

Piston, Damping, Compression, 2025 GRIP SL

Spring: Conical, Rebound Check, 8.5 , 15.3 ID, 19.7 OD, 0.65 Wire

TORQUE:
9±1 IN.LB.

Fastener, Custom: Bolt, Base Valve, 2025 GRIP SL

SEE DETAIL Y

Damping Adj Part: Barrel, Adjuster, 2025 GRIP SL

820-03-711-KIT
Valve Stack Assy: 2025 GRIP SL, Compression Light, CL

GREASE:
THIN LAYER
OF SLICK HONEY

Seals: O-Ring [8mm ID X 1.5mm CS] Metric, N-70, Static

GREASE:
THIN LAYER
OF SLICK HONEY

O-Ring (-010) [.070 C.S. X .239 ID]

Damping Adj Part: Hat Preload Comp, 2025 GRIP SL

Fastener Standard (Metric): PIN SS 2 X 12

Piston: Floating: 24mm Bore, 2025 GRIP SL

IFP BODY

Seals: O-Ring [20.0mm ID x 2.0mm CS] Metric, N-70, Static

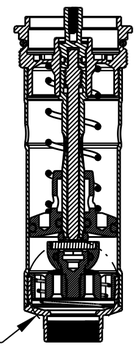

SEE DETAIL Z

SECTION A-A

GREASE:
THIN LAYER
OF SLICK HONEY

TORQUE:
55±5 IN.LB.

SPRING, PISTON, FLOATING

COMP SHAFT

O-RING

TOPCAP BODY

COMP NEEDLE

Seals: O-Ring [4.0mm ID x 1.5mm CS] Metric, N-70, Static

Damping Adj Part: Coupler, 3-Pos, 2025 GRIP SL

Retaining Ring: Internal Smalley, WHM-31-S02

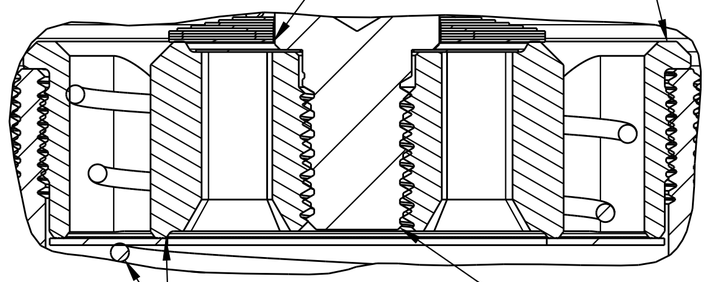

IMPORTANT:
DO NOT PINCH VALVES *

IMPORTANT:
ORIENTATION OF PISTON IS CRITICAL
PISTON FLANGE TOWARDS TOPCAP

IMPORTANT:
DO NOT PINCH CHECK VALVE *
DO NOT PINCH CHECK SPRING *

IMPORTANT:
WIPE OFF EXCESS LOCTITE
AFTER TORQUE

DETAIL Z
SCALE 6:1

- PROPRIETARY-
THIS DOCUMENT CONTAINS CONFIDENTIAL, PROPRIETARY INFORMATION
THAT IS FOX PROPERTY. DO NOT DISCLOSE TO OR DUPLICATE
FOR OTHERS EXCEPT AS AUTHORIZED BY FOX.

FOX Factory, Inc.
130 Hangar Way, Watsonville, CA 95076 USA
Ph 831-768-1100
Fax 831-768-9312

TITLE
2026 36 SL, GRIP SL, Topcap Assy, 3 Pos Adj

SIZE C | DWG. NO. 820-05-825-KIT

PLOT SCALE 1:1 | SHEET 1 OF 1

ProE ASSEM