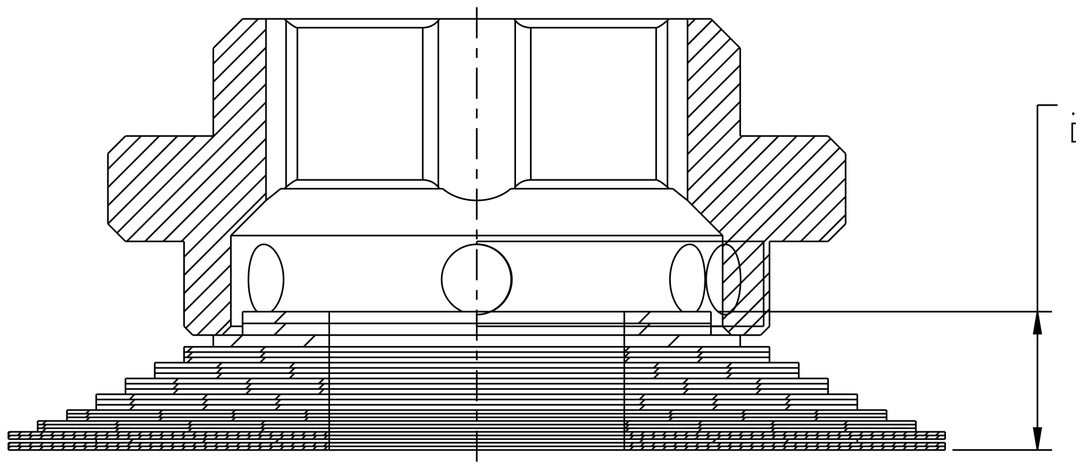

SECTION A-A
SCALE 10:1

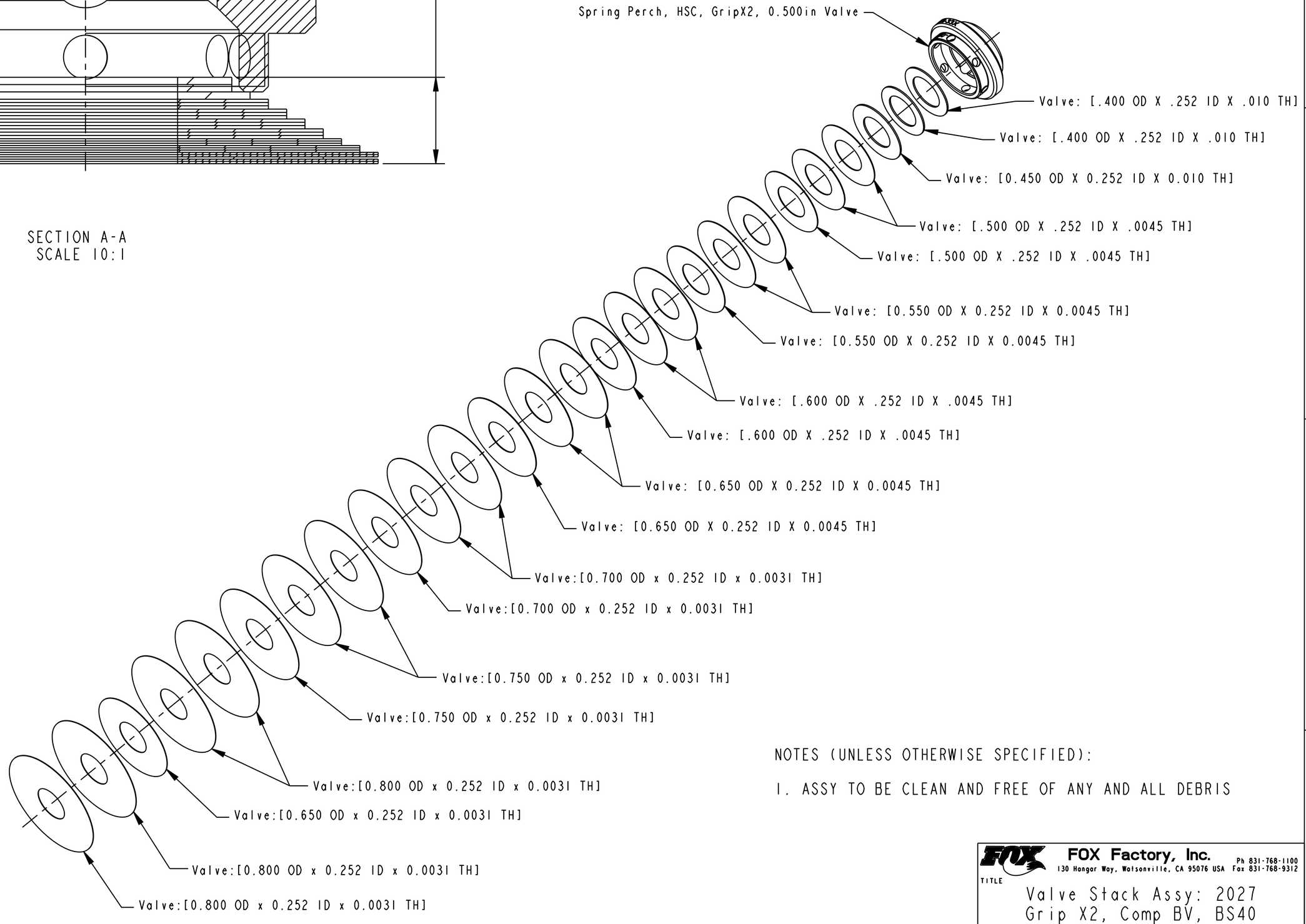

NOTES (UNLESS OTHERWISE SPECIFIED):

1. ASSY TO BE CLEAN AND FREE OF ANY AND ALL DEBRIS

- PROPRIETARY-
THIS DOCUMENT CONTAINS CONFIDENTIAL, PROPRIETARY INFORMATION THAT IS FOX PROPERTY. DO NOT DISCLOSE TO OR DUPLICATE FOR OTHERS EXCEPT AS AUTHORIZED BY FOX.

FOX Factory, Inc.
130 Hangar Way, Watsonville, CA 95076 USA
Ph 831-768-1100 Fax 831-768-9312

TITLE
Valve Stack Assy: 2027
Grip X2, Comp BV, BS40

SIZE C | DWG. NO. 820-03-851-KIT

PLOT SCALE 2:1 | SHEET 1 OF 1

ProE ASSEM