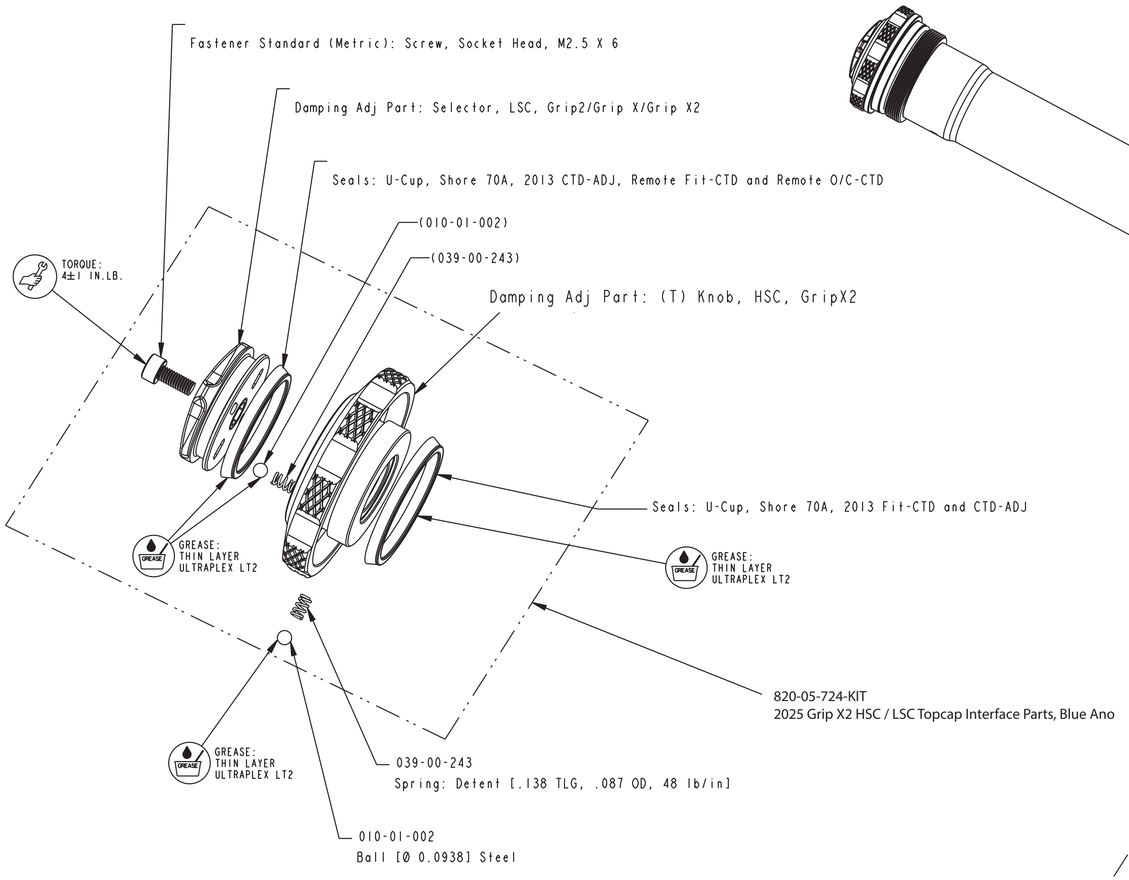

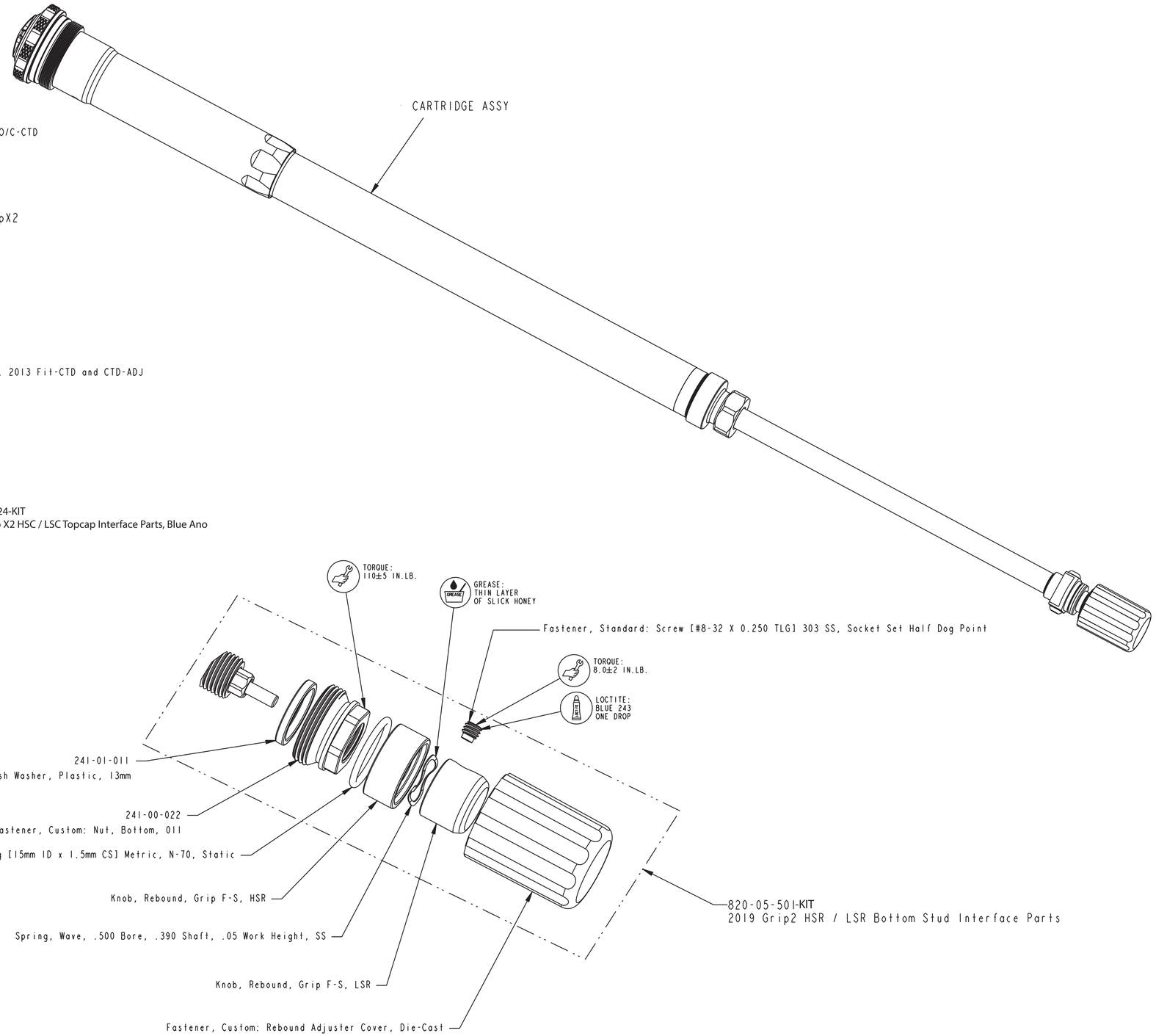

NOTES (UNLLESS OTHERWISE SPECIFIED):

1. ASSY TO BE CLEAN AND FREE OF ANY AND ALL DEBRIS

-PROPRIETARY-
THIS DOCUMENT CONTAINS CONFIDENTIAL, PROPRIETARY INFORMATION THAT IS FOX PROPERTY. DO NOT DISCLOSE TO OR DUPLICATE FOR OTHERS EXCEPT AS AUTHORIZED BY FOX.

FOX Factory, Inc.
130 Hangar Way, Watsonville, CA 95076 USA
Ph 831-768-1100
Fax 831-768-9312

TITLE: 2027 36 160, Grip X2 HSR / LSR / HSC/ LSC Cart Assy, Cart Assy Complete, BS50, MS50, RS60, Blue Ano

SIZE: D | DWG. NO.: 820-18-653-KIT

PLOT SCALE: 1:1 | SHEET 1 OF 1