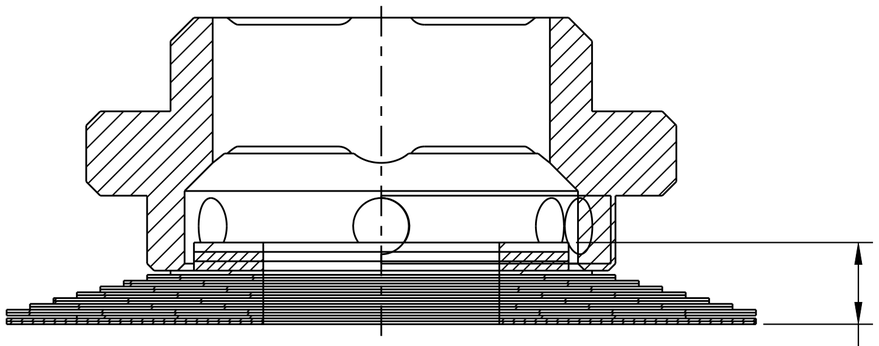

.087 ±.002 VALVE STACK HEIGHT
[2,21]

SECTION A-A
SCALE 8:1

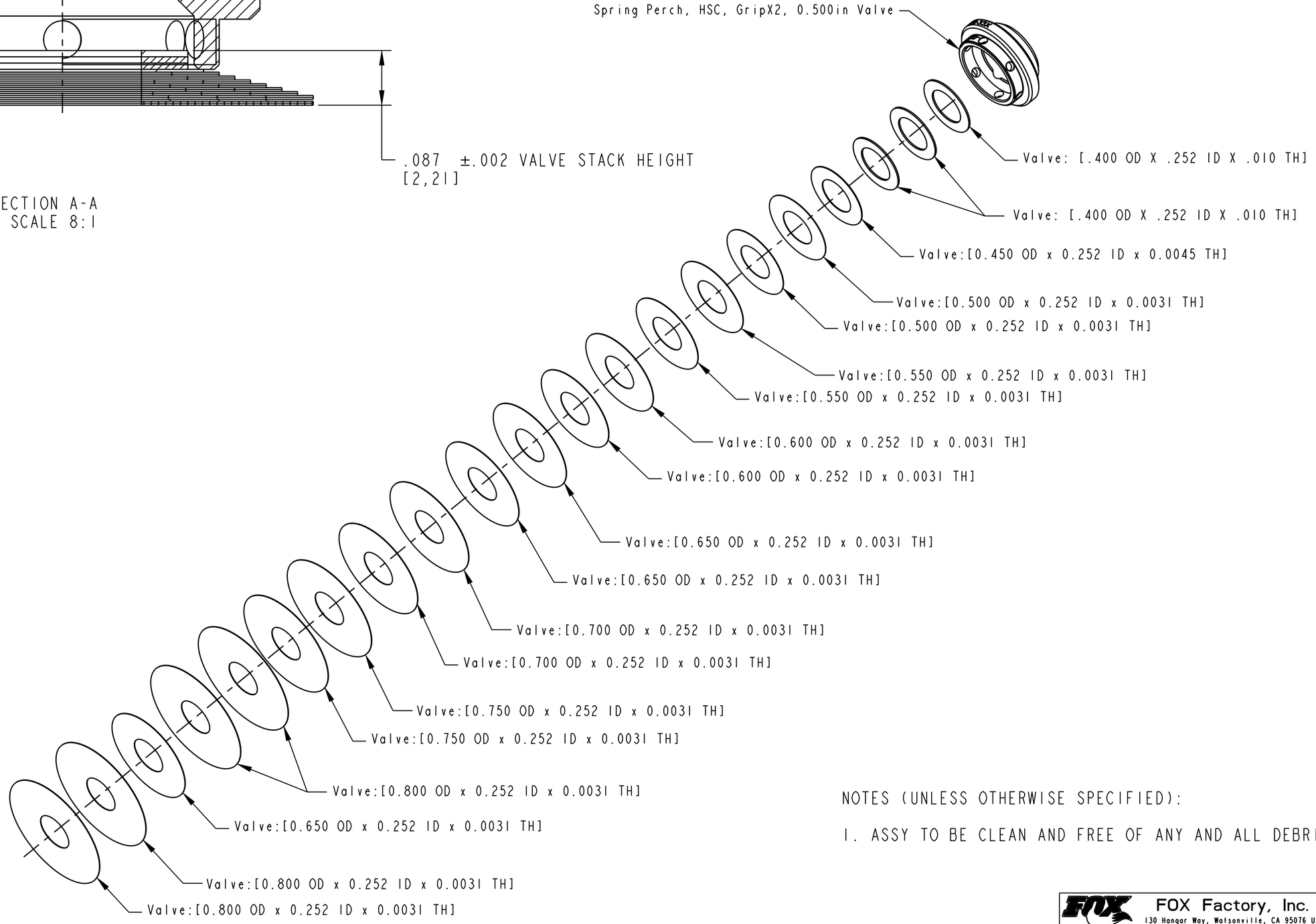

NOTES (UNLESS OTHERWISE SPECIFIED):

1. ASSY TO BE CLEAN AND FREE OF ANY AND ALL DEBRIS

- PROPRIETARY -
THIS DOCUMENT CONTAINS CONFIDENTIAL, PROPRIETARY INFORMATION
THAT IS FOX PROPERTY. DO NOT DISCLOSE TO OR DUPLICATE
FOR OTHERS EXCEPT AS AUTHORIZED BY FOX.

FOX Factory, Inc.
130 Hangar Way, Watsonville, CA 95076 USA
Ph 831-768-1100
Fax 831-768-9312

TITLE
Valve Stack Assy: 2027
Grip X2, Comp BV, BS10

SIZE	DWG. NO.	
C	820-03-881-KIT	
PLOT SCALE 2:1		SHEET 1 OF 1

ProE ASSEM