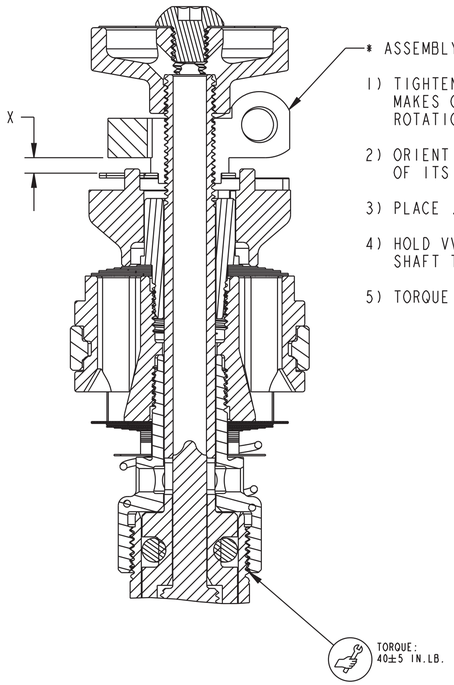

* ASSEMBLY INSTRUCTIONS:

1) TIGHTEN VVC NUT (241-00-085) UNTIL VVC LEAF SPRING (043-XX-650) MAKES CONTACT WITH POSTS ON VVC PLATE (050-00-XXX) AND ROTATION STOPS

2) ORIENT VVC LEAF SPRING TO THE APPROX. CENTER OF ITS ADJUSTMENT RANGE

3) PLACE .050 [1,27] THICK SHIM AT "X"

4) HOLD VVC NUT TO PISTON ASSY AND TORQUE HSR SHAFT TO 2±.5 in-lb

5) TORQUE M3 SHCS (019-01-095) TO SPECIFIED TORQUE

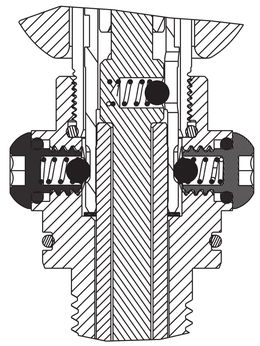

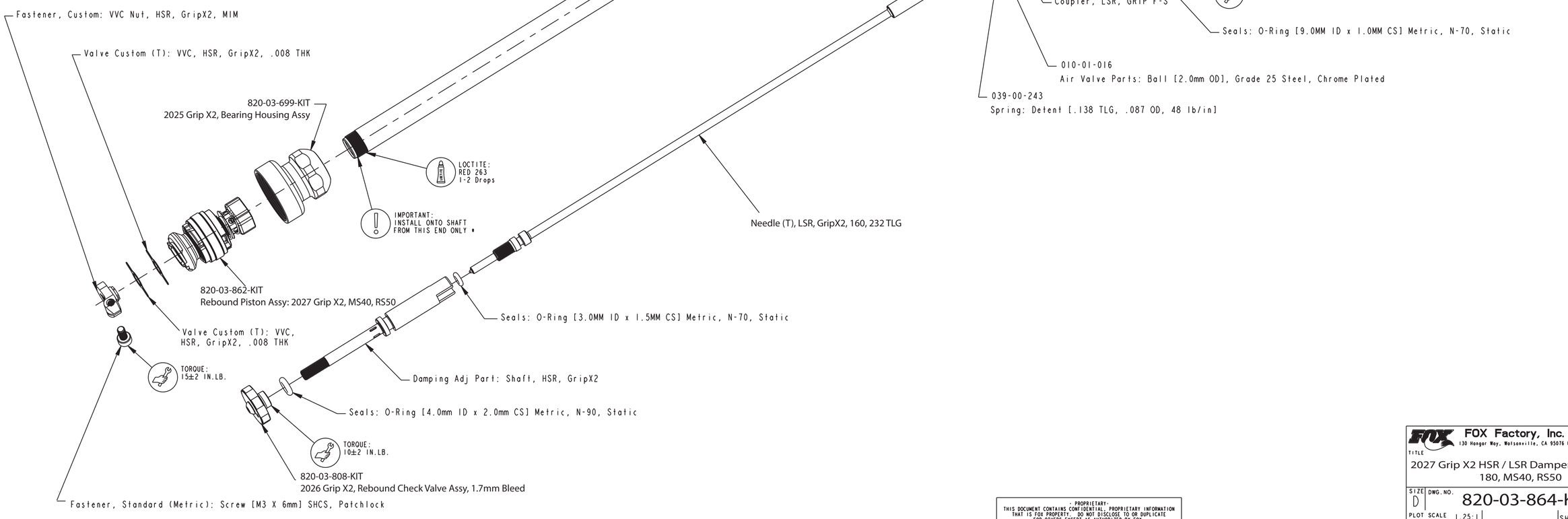

- PROPRIETARY -
THIS DOCUMENT CONTAINS CONFIDENTIAL, PROPRIETARY INFORMATION THAT IS FOX PROPERTY. DO NOT DISCLOSE TO OR DUPLICATE FOR OTHERS EXCEPT AS AUTHORIZED BY FOX.

FOX Factory, Inc.
130 Hangar Way, Watsonville, CA 95076 USA
Ph 831-768-1100
Fax 831-768-9312

TITLE
2027 Grip X2 HSR / LSR Damper Shaft Assy, 180, MS40, RS50

SIZE D | DWG. NO. 820-03-864-KIT

PLOT SCALE 1.25:1 | SHEET 1 OF 2