— PROPRIETARY —

THIS DOCUMENT CONTAINS CONFIDENTIAL, PROPRIETARY INFORMATION THAT IS FOX PROPERTY. DO NOT DISCLOSE TO OR DUPLICATE FOR OTHERS EXCEPT AS AUTHORIZED BY FOX.

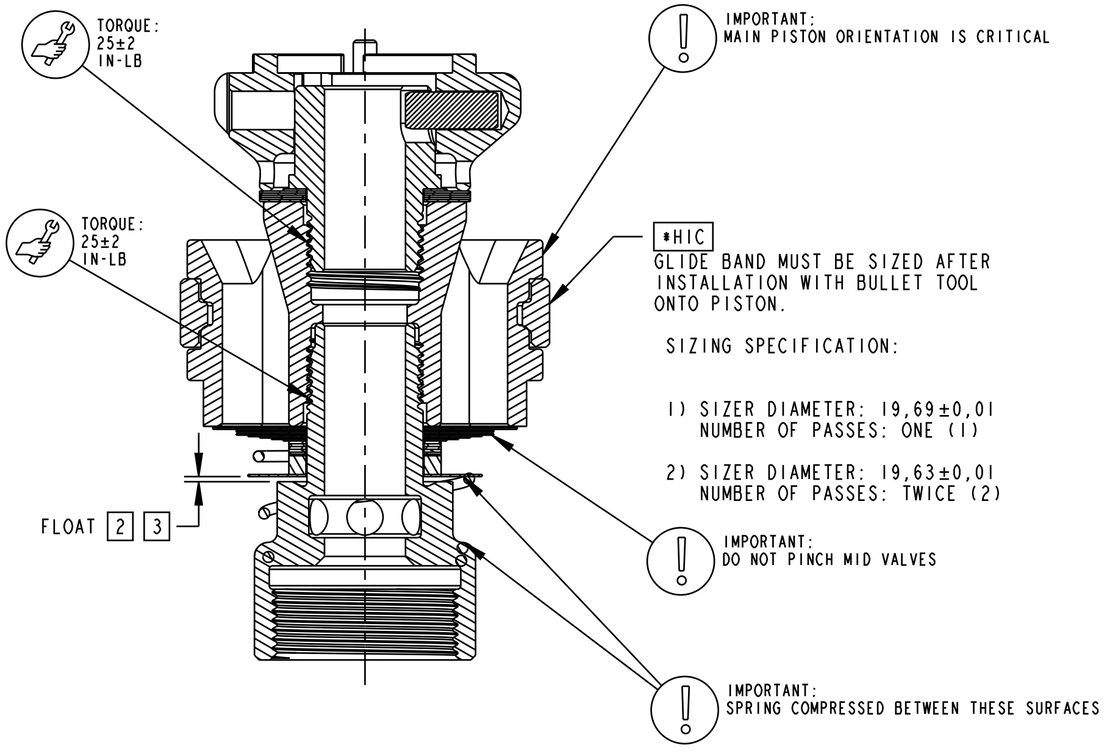

SECTION B-B
SCALE 4:1

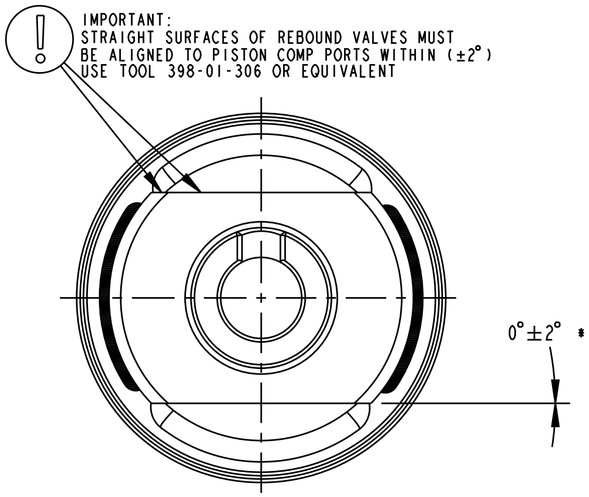

SCALE 4:1

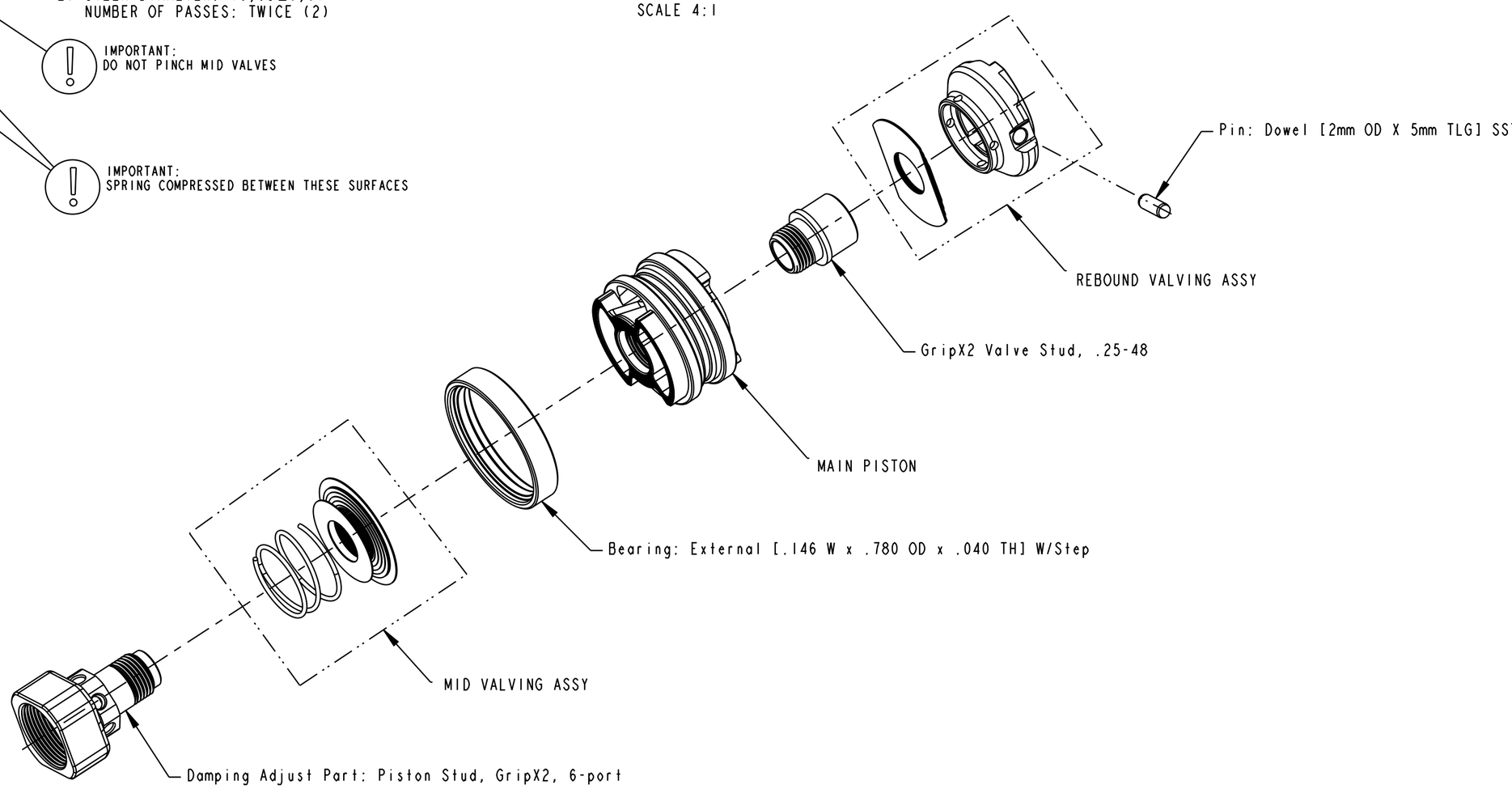

NOTES (UNLESS OTHERWISE SPECIFIED):

1. ASSY TO BE CLEAN AND FREE OF ANY AND ALL DEBRIS.

[2] SEE SHEET 2 FOR PROCEDURE TO ADJUST FLOAT.

[3] FLOAT IS SPECIFIED IN MID-VALVE STACK ASSY DRAWING.

FOX Factory, Inc.
2055 Sugarloaf Circle, Suite 300
Duluth, Ga 30097 USA Phone 800-369-7469

TITLE
Rebound Piston Assy: 2027 Grip X2, Service Parts

SIZE	DWG. NO.	REV
C	820-03-850-KIT	B

PLOT SCALE: 2:1 | SHEET: 1 OF 2