— PROPRIETARY —
THIS DOCUMENT CONTAINS CONFIDENTIAL, PROPRIETARY INFORMATION THAT IS FOX PROPERTY. DO NOT DISCLOSE TO OR DUPLICATE FOR OTHERS EXCEPT AS AUTHORIZED BY FOX.

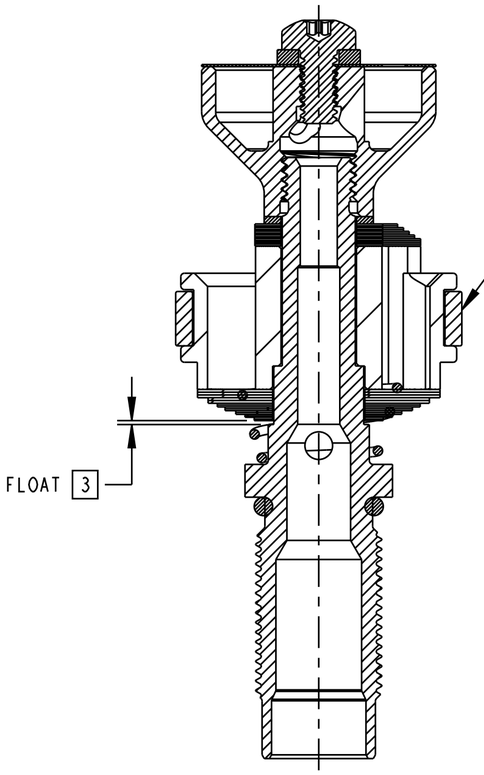

*HIC
GLIDE BAND MUST BE SIZED AFTER INSTALLATION WITH BULLET TOOL ONTO PISTON

SIZING SPECIFICATION:

SIZER DIAMETER: 15.35±0.005
NUMBER OF PASSES: TWICE (2)

FLOAT [3]

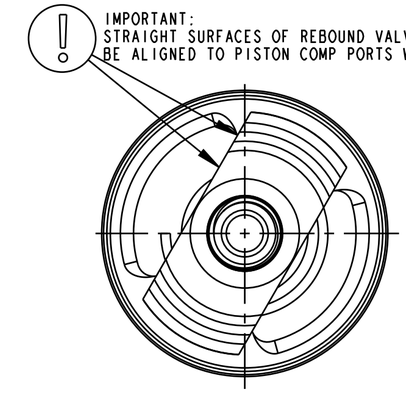

SCALE 4:1

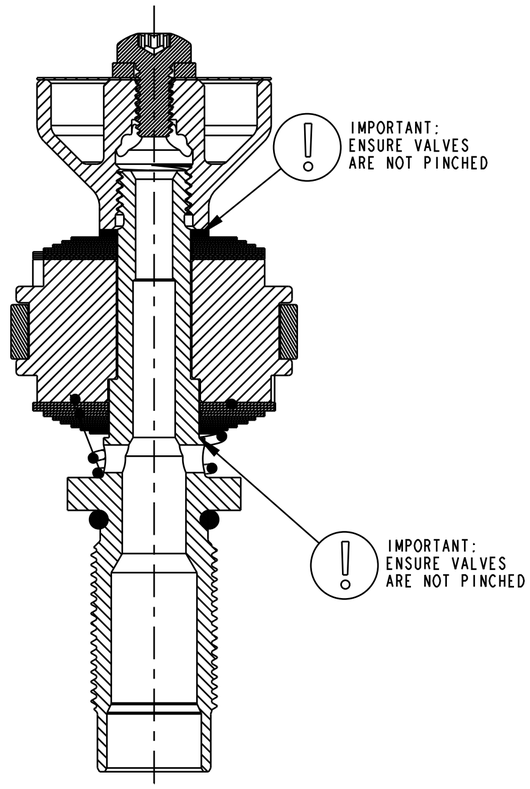

NOTES (UNLESS OTHERWISE SPECIFIED):

1. ASSEMBLY TO BE CLEAN AND FREE OF ALL DEBRIS.
[3] FLOAT IS SPECIFIED IN MID-VALVE STACK ASSY DRAWING.

FOX Factory, Inc.
2055 Sugarloaf Circle, Suite 300
Duluth, Ga 30097 USA Phone 800-369-7469

TITLE
Rebound Piston Assy: 2027 Grip X, Service Parts

SIZE	DWG. NO.	REV
C	820-03-849-KIT	B

PLOT SCALE: 3:1 | SHEET: 1 OF 1