— PROPRIETARY —

THIS DOCUMENT CONTAINS CONFIDENTIAL, PROPRIETARY INFORMATION THAT IS FOX PROPERTY. DO NOT DISCLOSE TO OR DUPLICATE FOR OTHERS EXCEPT AS AUTHORIZED BY FOX.

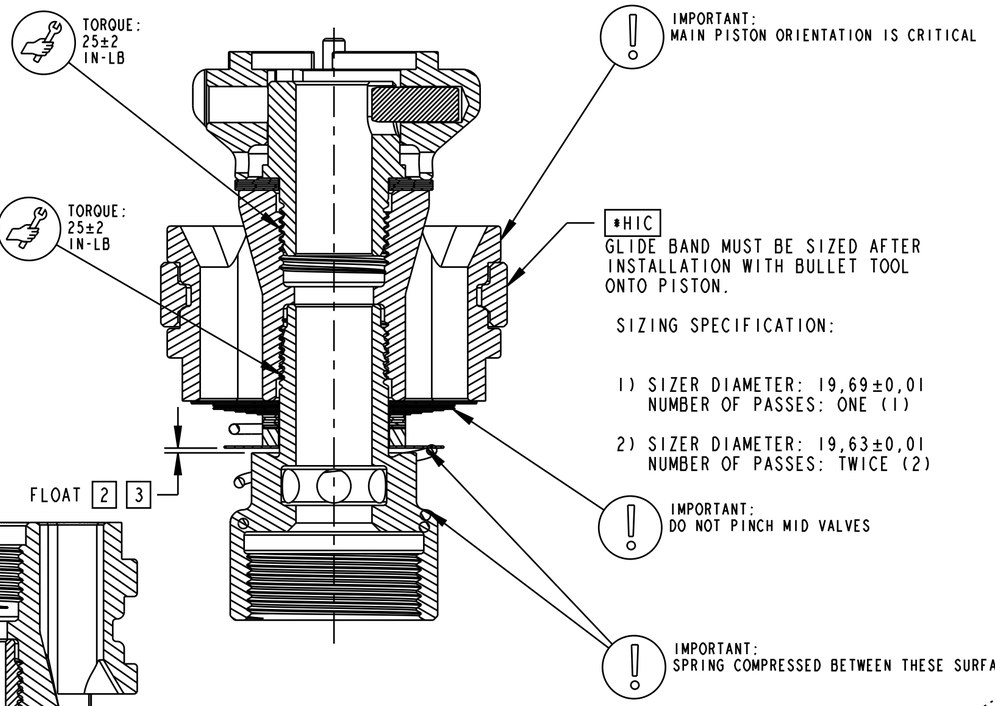

SECTION B-B
SCALE 4:1

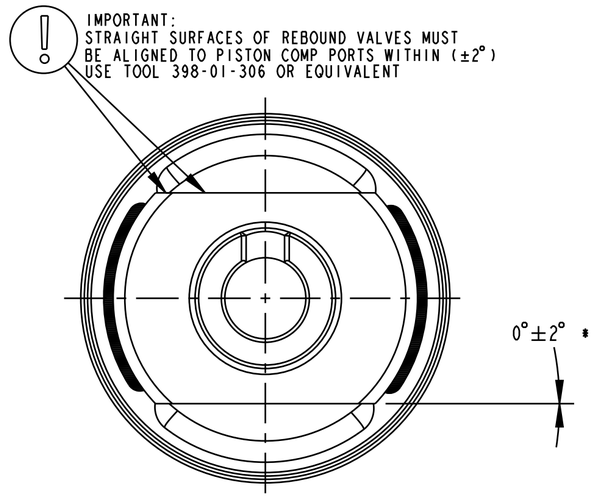

SCALE 4:1

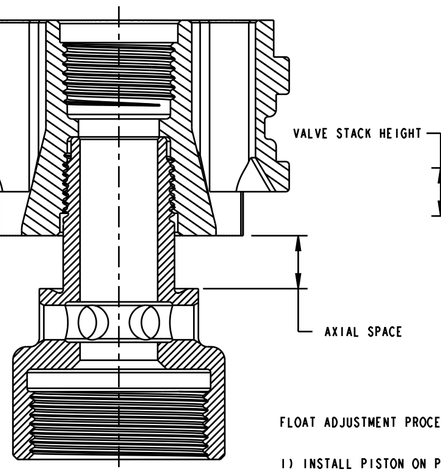

SECTION A-A

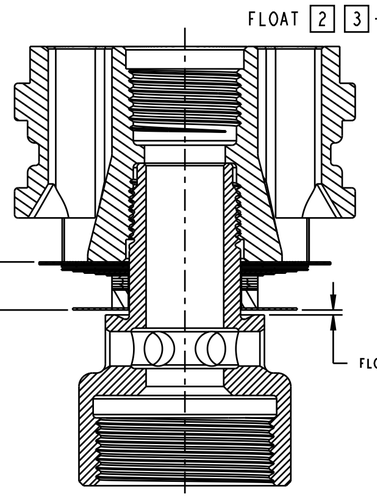

SECTION A-A

FLOAT ADJUSTMENT PROCEDURE:

1) INSTALL PISTON ON PISTON STUD WITHOUT VALVES.
2) TORQUE PISTON PER 610-23-213.
3) MEASURE AXIAL SPACE.
4) CONFIGURE SHIMS AS NEEDED PER MID VALVE ASSY DWG TO ADJUST VALVE STACK HEIGHT AND ACHIEVE SPECIFIED FLOAT.
5) REMOVE PISTON AND REINSTALL WITH CONFIGURED VALVE STACK.

NOTES (UNLESS OTHERWISE SPECIFIED):

1. ASSY TO BE CLEAN AND FREE OF ANY AND ALL DEBRIS.

[2] SEE SHEET 2 FOR PROCEDURE TO ADJUST FLOAT.

[3] FLOAT IS SPECIFIED IN MID-VALVE STACK ASSY DRAWING.

FOX Factory, Inc.
2055 Sugarloaf Circle, Suite 300
Duluth, Ga 30097 USA Phone 800-369-7469

TITLE: Rebound Piston Assy: 2027 Grip X2, MS50, RS60

SIZE	DWG. NO.	REV
C	820-03-839-KIT	B

PLOT SCALE: 2:1 | SHEET: 1 OF 2