PROPRIETARY
THIS DOCUMENT CONTAINS CONFIDENTIAL, PROPRIETARY INFORMATION THAT IS FOX PROPERTY. DO NOT DISCLOSE TO OR DUPLICATE FOR OTHERS EXCEPT AS AUTHORIZED BY FOX.

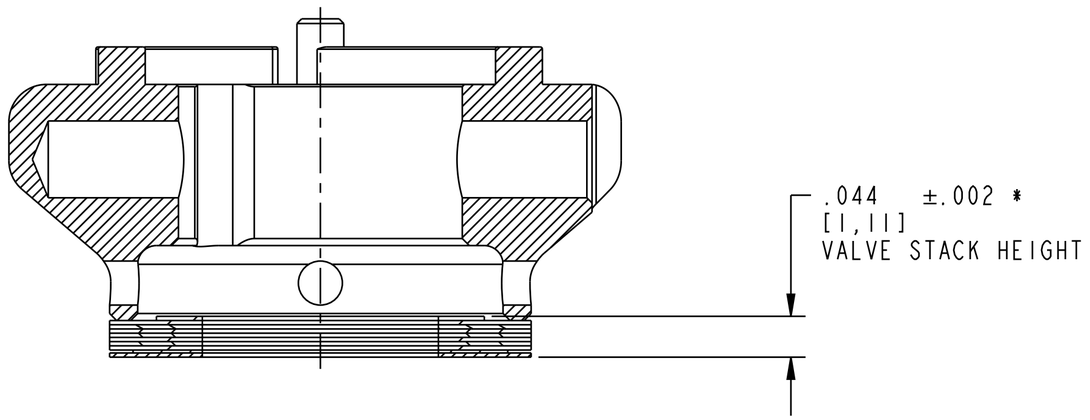

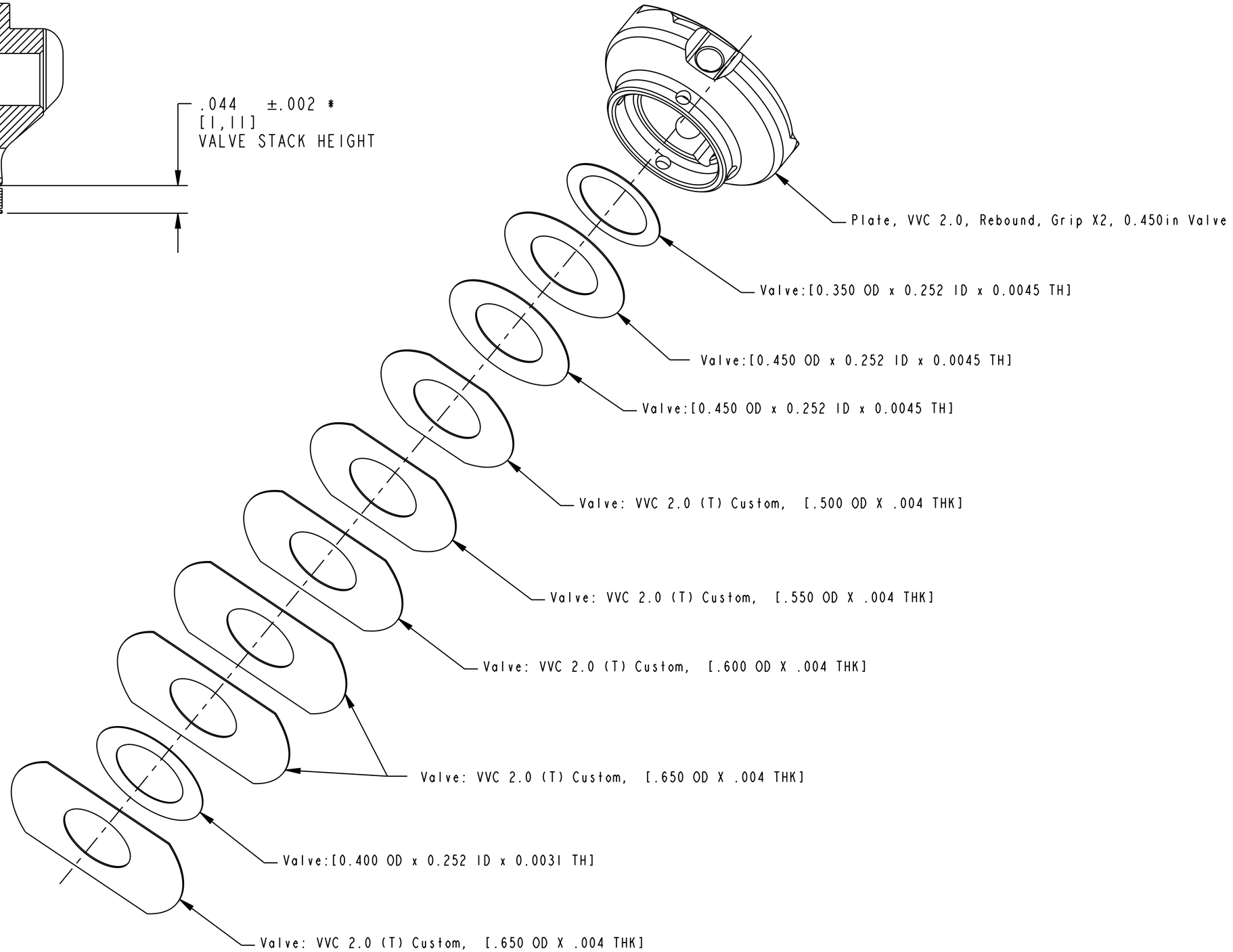

NOTES (UNLESS OTHERWISE SPECIFIED):

1. ASSY TO BE CLEAN AND FREE OF ANY AND ALL DEBRIS

FOX Factory, Inc.
2055 Sugarloaf Circle, Suite 300
Duluth, Ga 30097 USA Phone 800-369-7469

TITLE: Valve Stack Assy: 2027 Grip X2, Rebound Valving, RS60

SIZE	DWG. NO.	REV
C	820-03-833-KIT	A

PLOT SCALE: 4:1 | SHEET: 1 OF 1