— PROPRIETARY —
THIS DOCUMENT CONTAINS CONFIDENTIAL, PROPRIETARY INFORMATION THAT IS FOX PROPERTY. DO NOT DISCLOSE TO OR DUPLICATE FOR OTHERS EXCEPT AS AUTHORIZED BY FOX.

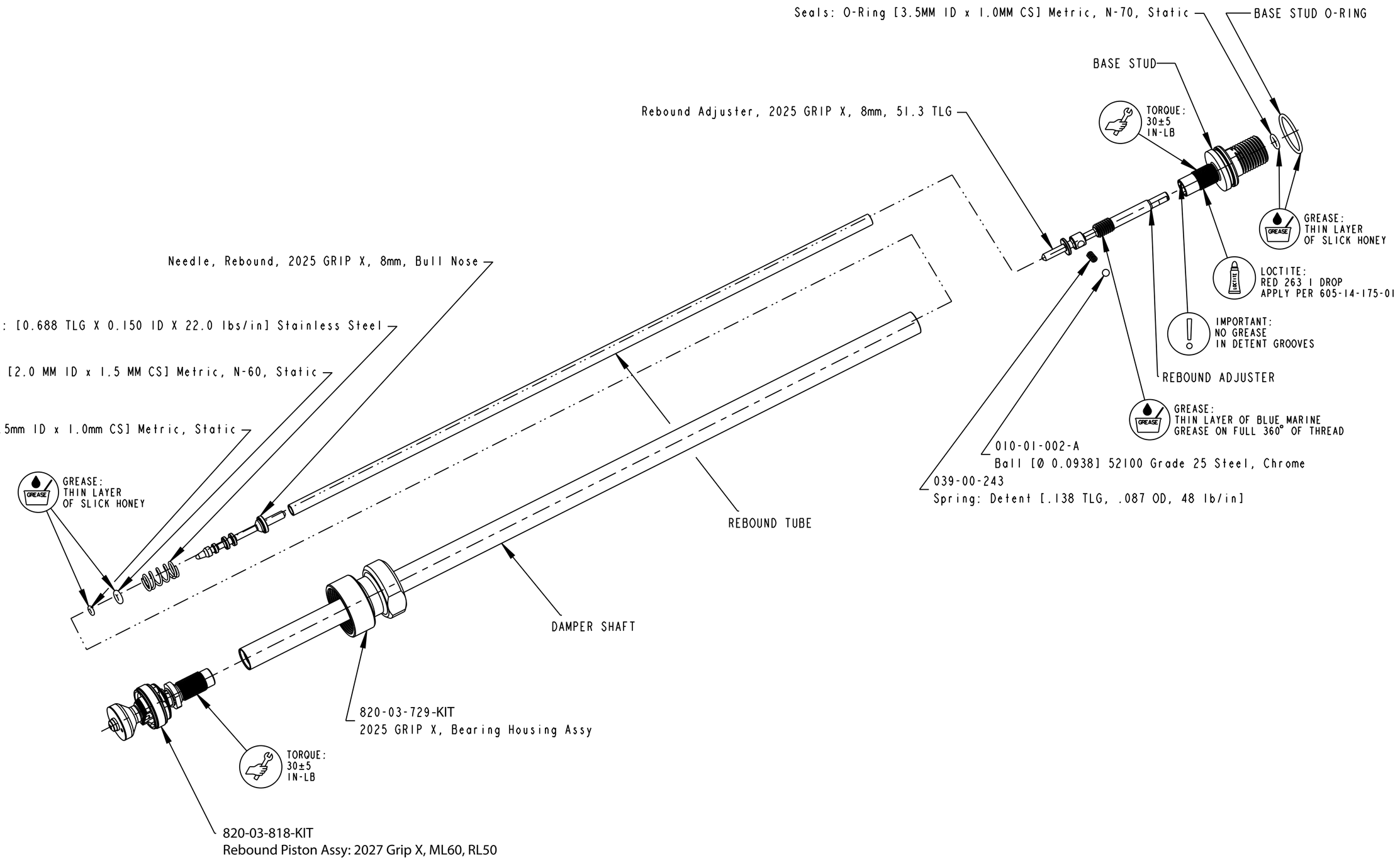

FOX Factory, Inc.
2055 Sugarloaf Circle, Suite 300
Duluth, Ga 30097 USA Phone 800-369-7469

TITLE
2027 36 160, GRIP X LSR Damper Shaft Assy

SIZE	DWG. NO.	REV
C	820-03-821-KIT	

PLOT SCALE: 1:1 | SHEET: 1 OF 1