— PROPRIETARY —
THIS DOCUMENT CONTAINS CONFIDENTIAL, PROPRIETARY INFORMATION THAT IS FOX PROPERTY. DO NOT DISCLOSE TO OR DUPLICATE FOR OTHERS EXCEPT AS AUTHORIZED BY FOX.

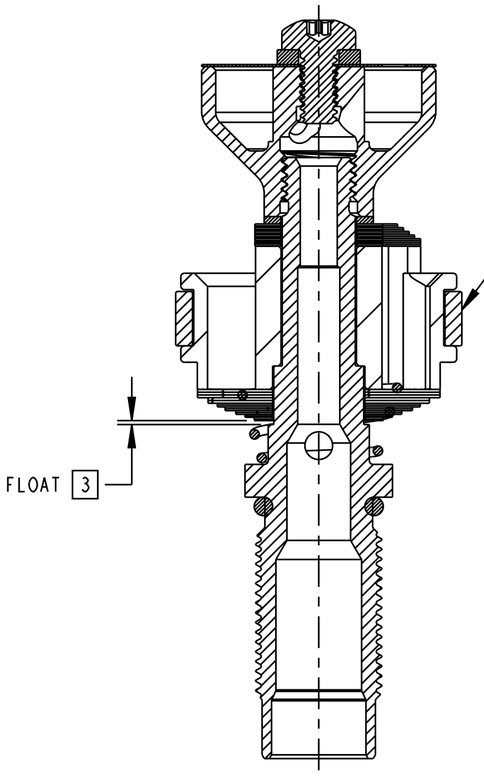





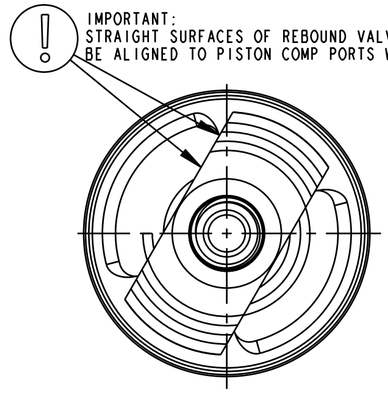


SCALE 4:1

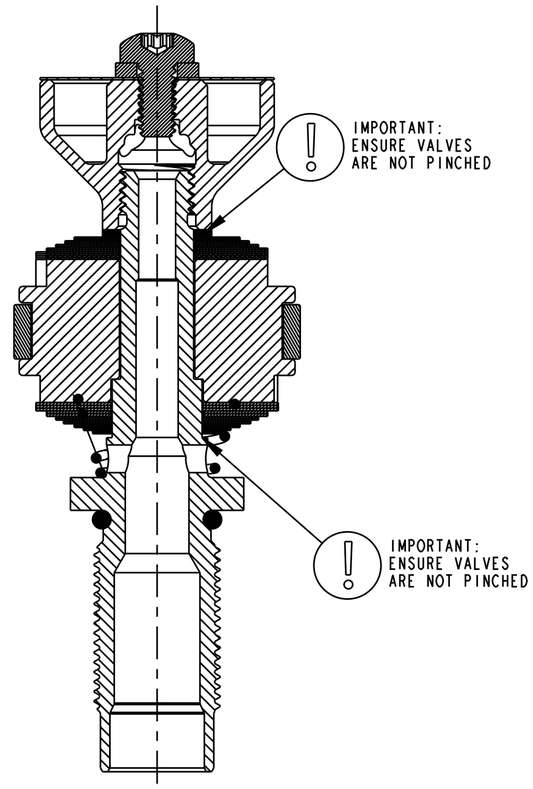


FOX Factory, Inc.
2055 Sugarloaf Circle, Suite 300
Duluth, Ga 30097 USA Phone 800-369-7469

TITLE
# Rebound Piston Assy: 2027 Grip X, ML60, RL50

| SIZE | DWG. NO. | REV |
|---|---|---|
| C | 820-03-818-KIT | B |

PLOT SCALE: 3:1 | SHEET: 1 OF 1