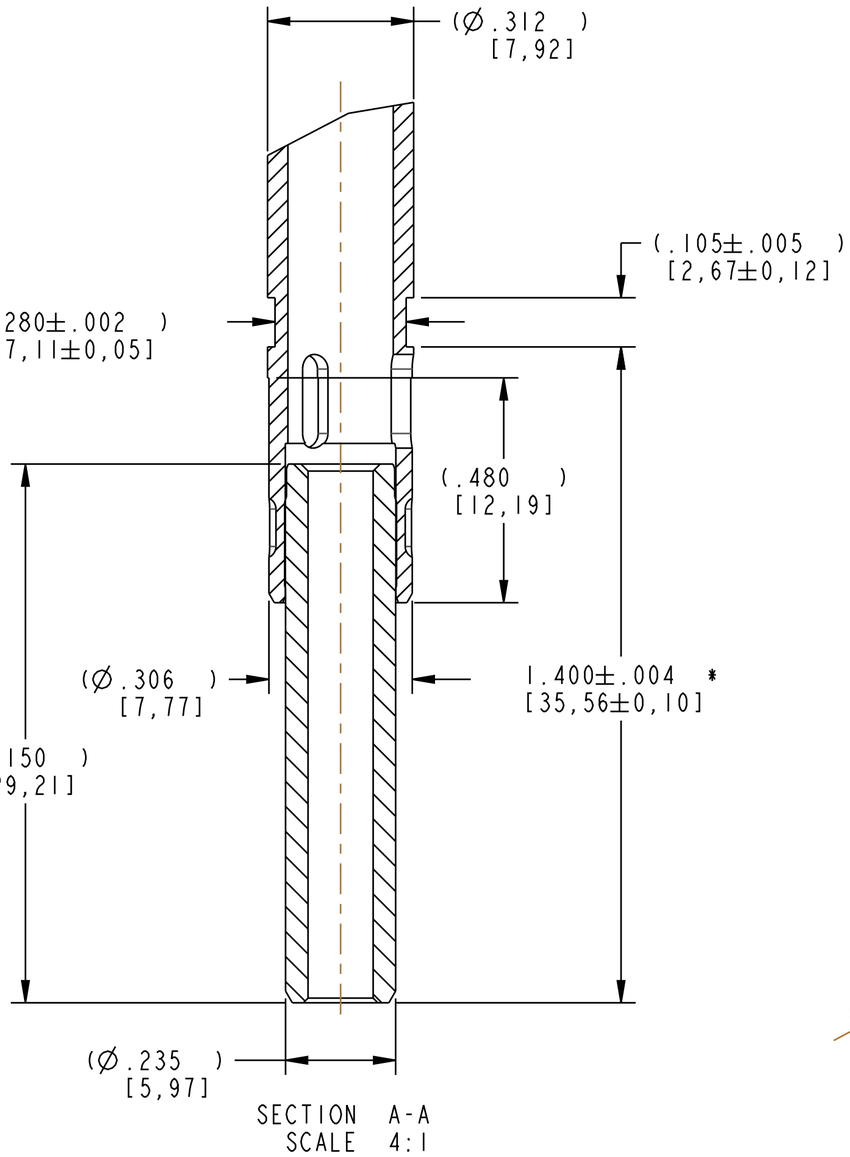

SECTION A-A
SCALE 4:1

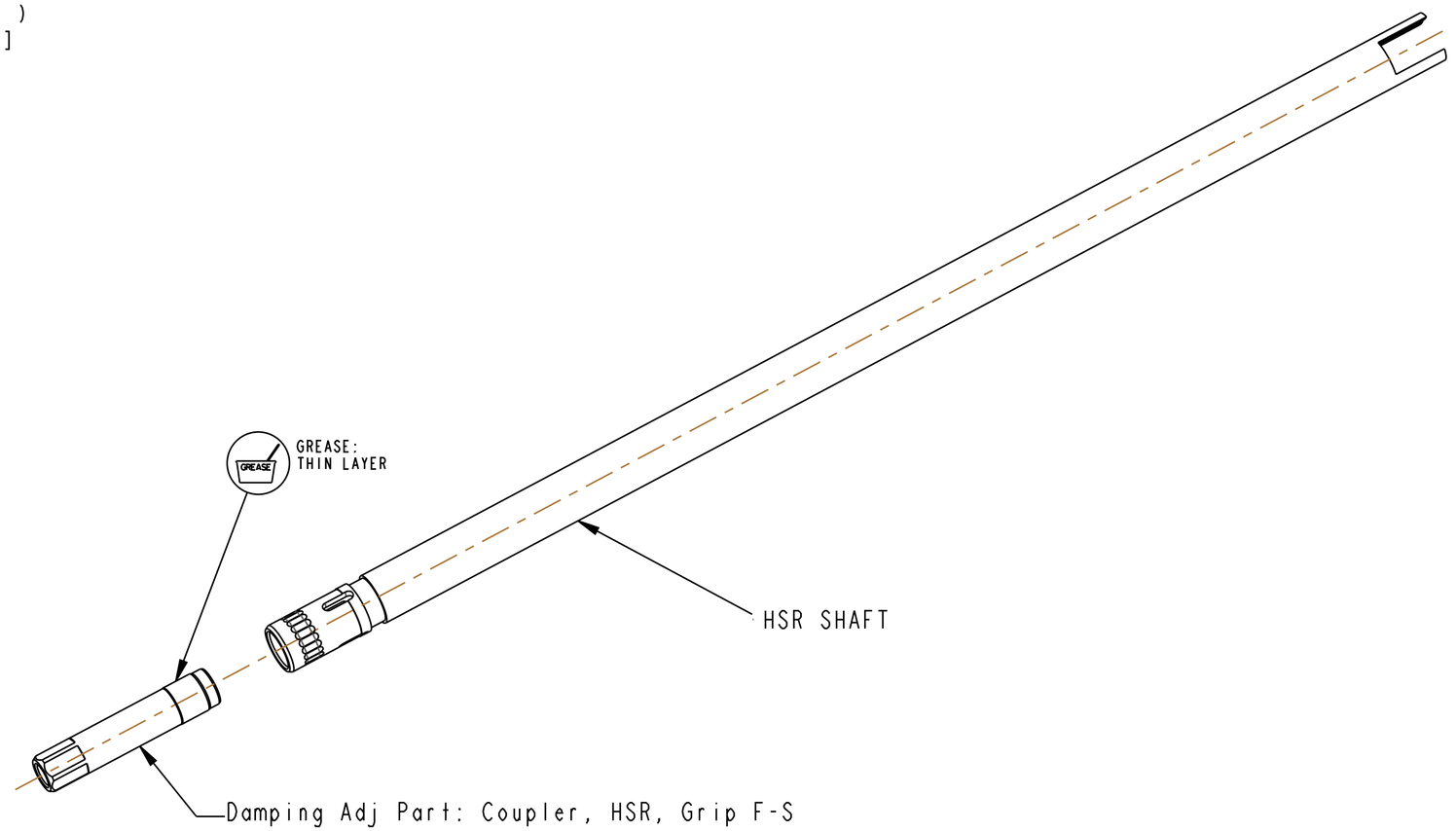

- PROPRIETARY -
THIS DOCUMENT CONTAINS CONFIDENTIAL, PROPRIETARY INFORMATION
THAT IS FOX PROPERTY. DO NOT DISCLOSE TO OR DUPLICATE
FOR OTHERS EXCEPT AS AUTHORIZED BY FOX.

FOX Factory, Inc.
130 Hangar Way, Watsonville, CA 95076 USA
Ph 831-768-1100
Fax 831-768-9312

TITLE
160, GripX2 HSR, 2-Piece
Damper Shaft Assy

SIZE C | DWG.NO. 820-03-734-KIT

PLOT SCALE 1.5:1 | SHEET 1 OF 1

ProE ASSEM