— PROPRIETARY —
THIS DOCUMENT CONTAINS CONFIDENTIAL, PROPRIETARY INFORMATION THAT IS FOX PROPERTY. DO NOT DISCLOSE TO OR DUPLICATE FOR OTHERS EXCEPT AS AUTHORIZED BY FOX.

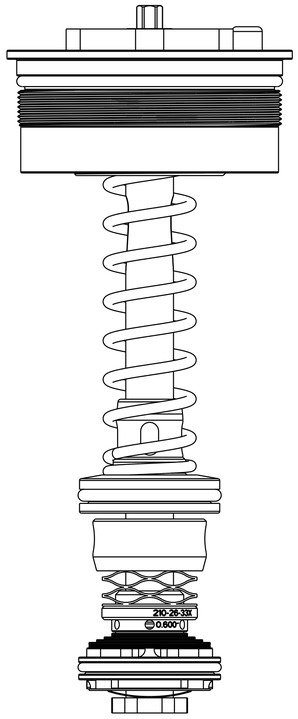

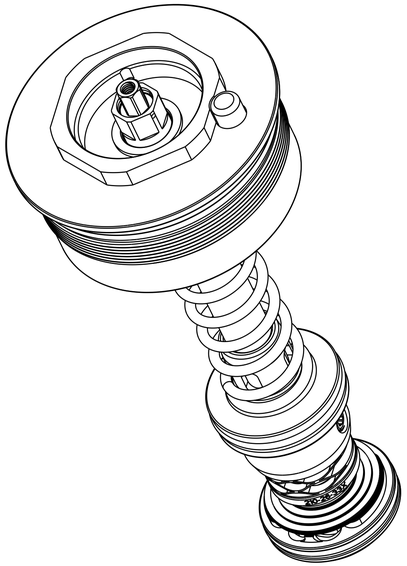

SEE DETAIL X

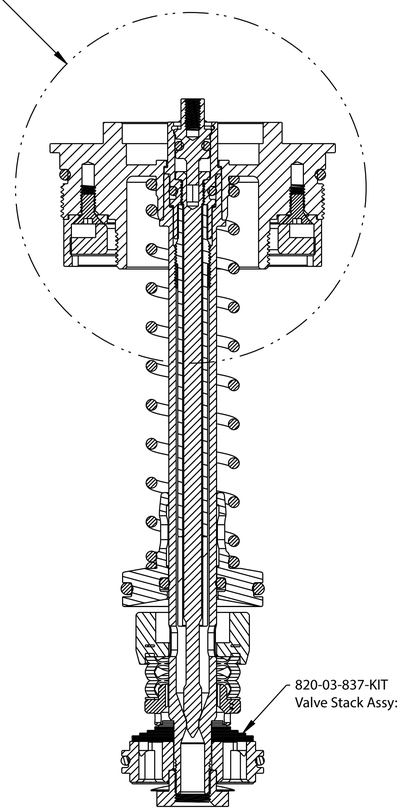

820-03-837-KIT
Valve Stack Assy: 2027 Grip X2, Comp BV, BS70

GREASE: THIN LAYER OF SLICK HONEY

SEE DETAIL Y

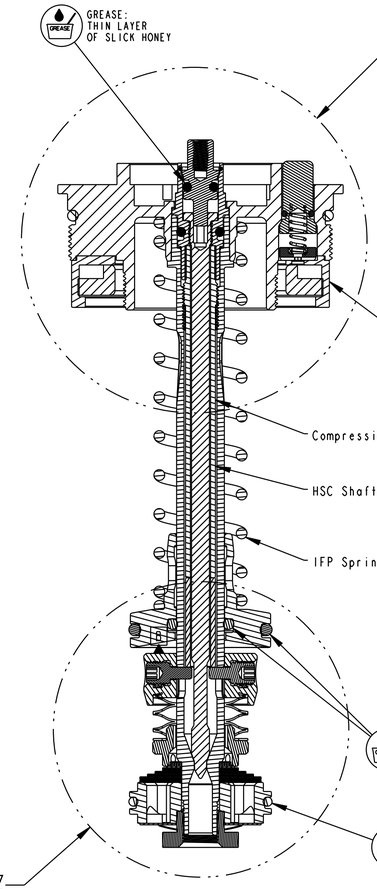

820-05-822-KIT
Topcap Bleeder Assy: 2026 Podium Grip X2

Compression Damper Shaft

HSC Shaft

IFP Spring

GREASE: THIN LAYER OF SLICK HONEY

GREASE: THIN LAYER OF SLICK HONEY

SEE DETAIL Z

FOX Factory, Inc.
2055 Sugarloaf Circle, Suite 300
Duluth, Ga 30097 USA Phone 800-369-7469

TITLE: Topcap Assy, 2027 Podium Grip X2

SIZE	DWG.NO.	REV
D	820-05-840-KIT	A

PLOT SCALE: 2:1 | SHEET: 1 OF 3