— PROPRIETARY —
THIS DOCUMENT CONTAINS CONFIDENTIAL, PROPRIETARY INFORMATION THAT IS FOX PROPERTY. DO NOT DISCLOSE TO OR DUPLICATE FOR OTHERS EXCEPT AS AUTHORIZED BY FOX.

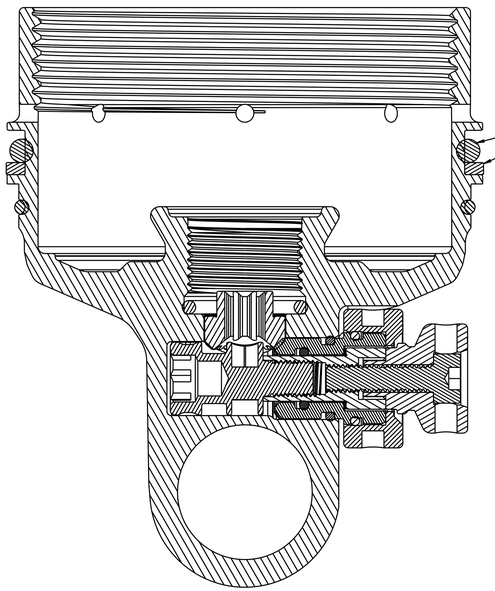

SECTION A-A

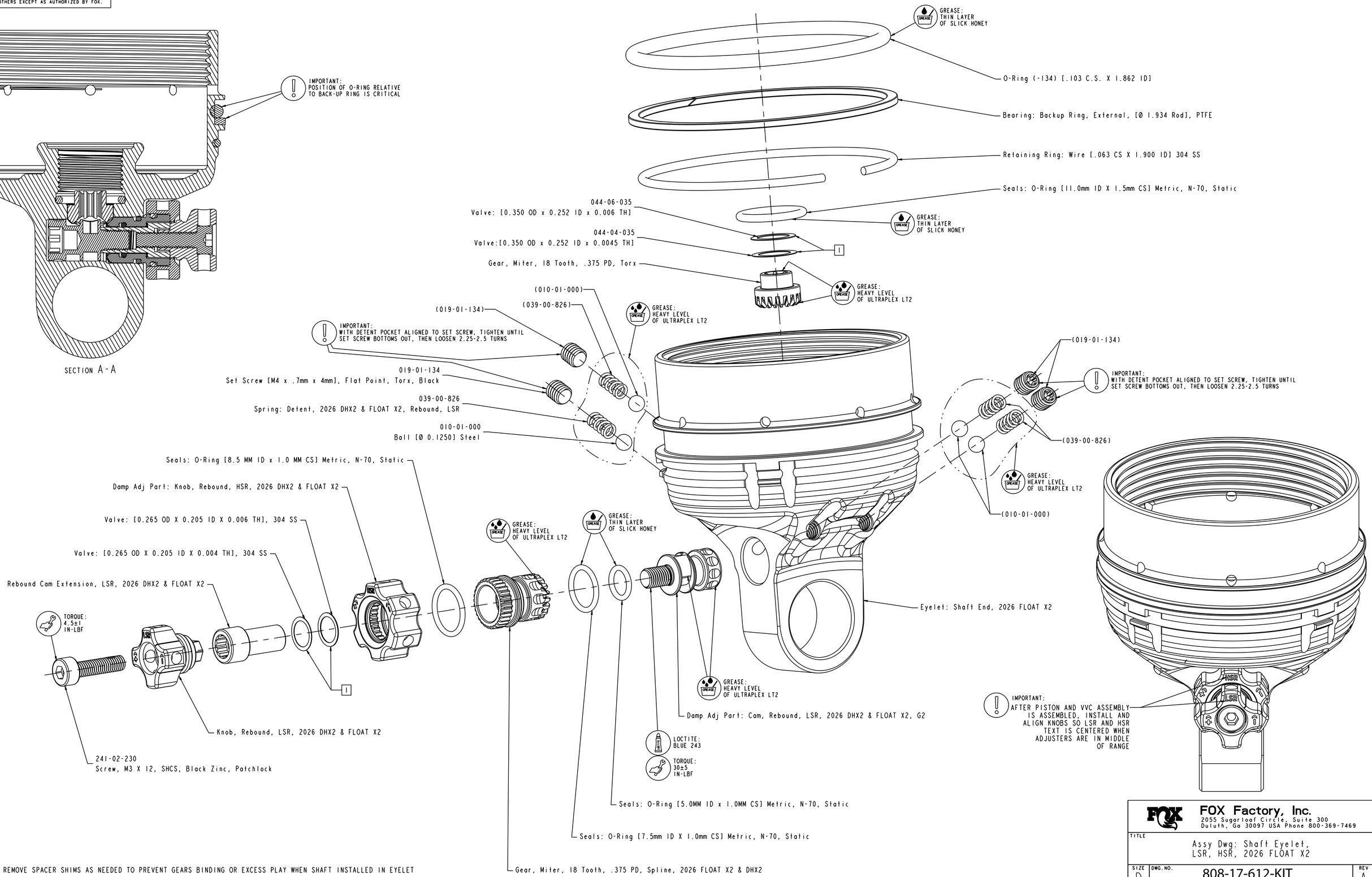

NOTES:

1 ADD OR REMOVE SPACER SHIMS AS NEEDED TO PREVENT GEARS BINDING OR EXCESS PLAY WHEN SHAFT INSTALLED IN EYELET

FOX Factory, Inc.
2055 Sugarloaf Circle, Suite 300
Duluth, Ga 30097 USA Phone 800-369-7469

TITLE		
Assy Dwg: Shaft Eyelet, LSR, HSR, 2026 FLOAT X2		
SIZE D	DWG.NO. 808-17-612-KIT	REV A
PLOT SCALE: 3:1		SHEET: 1 OF 1