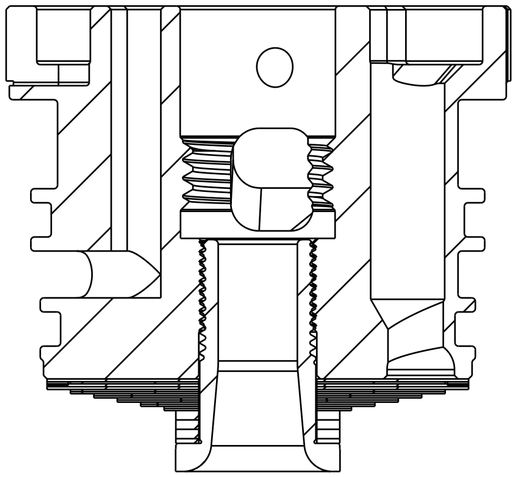

SECTION A-A
SCALE 4:1

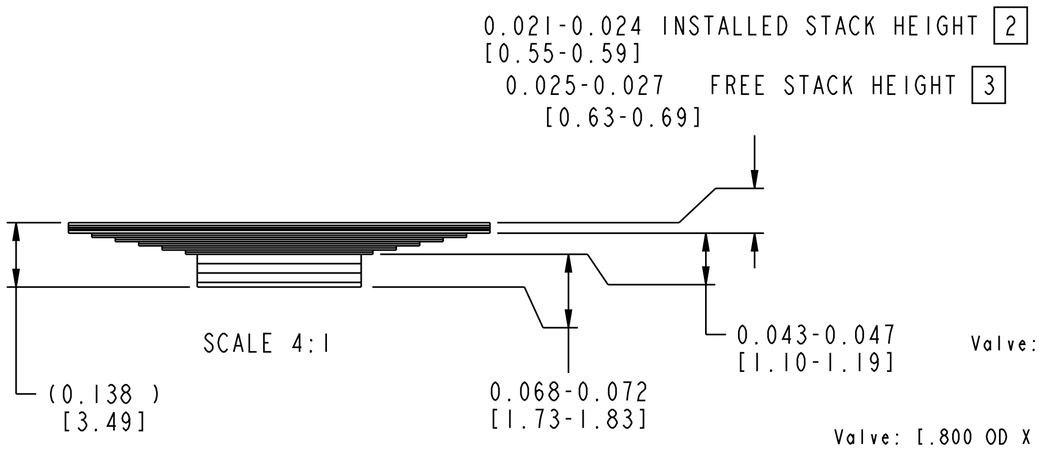

SCALE 4:1

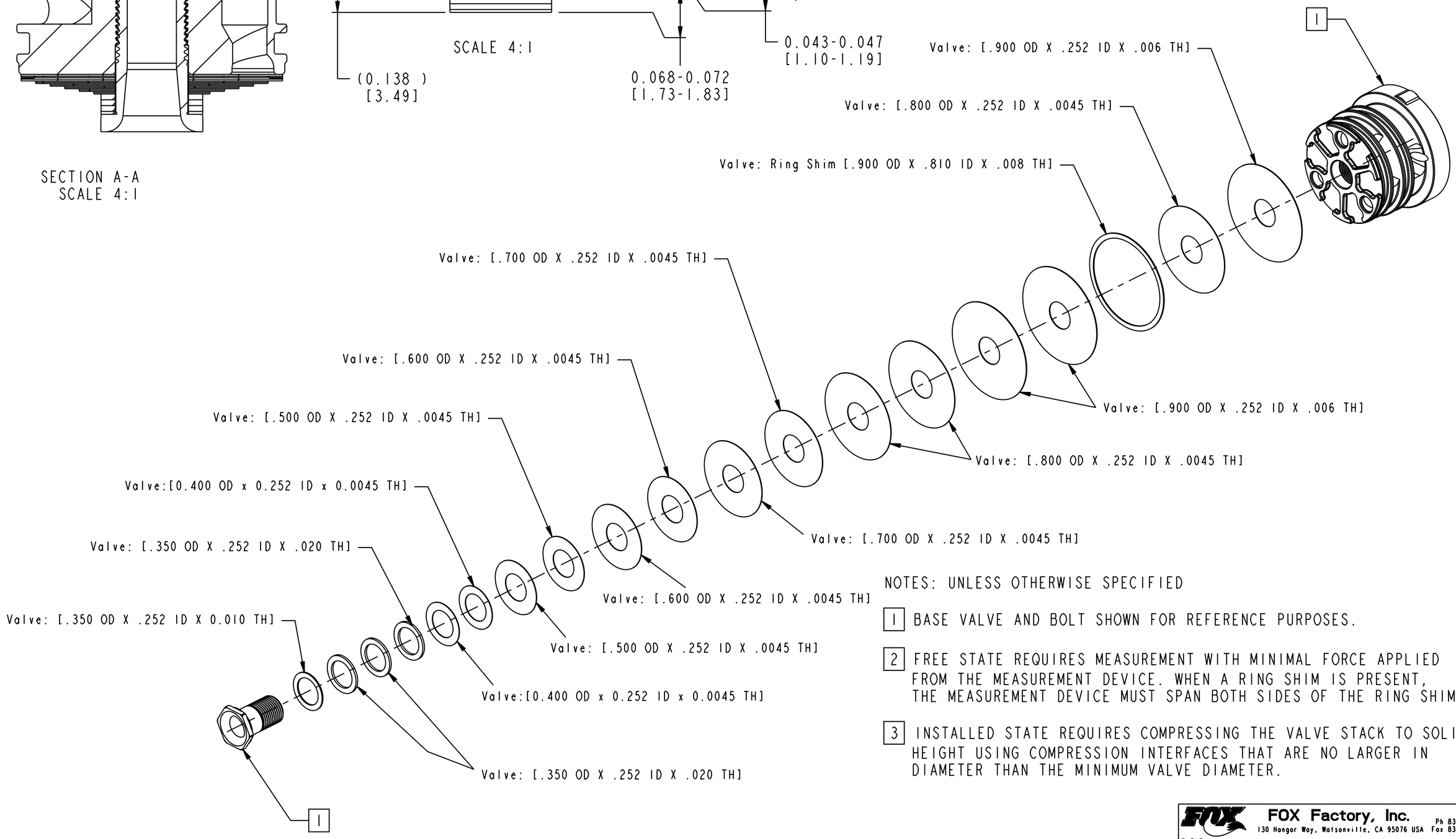

NOTES: UNLESS OTHERWISE SPECIFIED

1. BASE VALVE AND BOLT SHOWN FOR REFERENCE PURPOSES.
2. FREE STATE REQUIRES MEASUREMENT WITH MINIMAL FORCE APPLIED FROM THE MEASUREMENT DEVICE. WHEN A RING SHIM IS PRESENT, THE MEASUREMENT DEVICE MUST SPAN BOTH SIDES OF THE RING SHIM.
3. INSTALLED STATE REQUIRES COMPRESSING THE VALVE STACK TO SOLID HEIGHT USING COMPRESSION INTERFACES THAT ARE NO LARGER IN DIAMETER THAN THE MINIMUM VALVE DIAMETER.

FOX Factory, Inc.
130 Hangar Way, Watsonville, CA 95076 USA
Ph 831-768-1100
Fax 831-768-9312

TITLE
Valve Stack Assy: 2025 FLOAT X & DHX Live Valve Neo, B60, Base Valve Compression

SIZE C | DWG. NO. 805-05-245-KIT

PLOT SCALE 1.6:1 | SHEET 1 OF 1

- PROPRIETARY -
THIS DOCUMENT CONTAINS CONFIDENTIAL, PROPRIETARY INFORMATION THAT IS FOX PROPERTY. DO NOT DISCLOSE TO OR DUPLICATE FOR OTHERS EXCEPT AS AUTHORIZED BY FOX.

ProE ASSEM