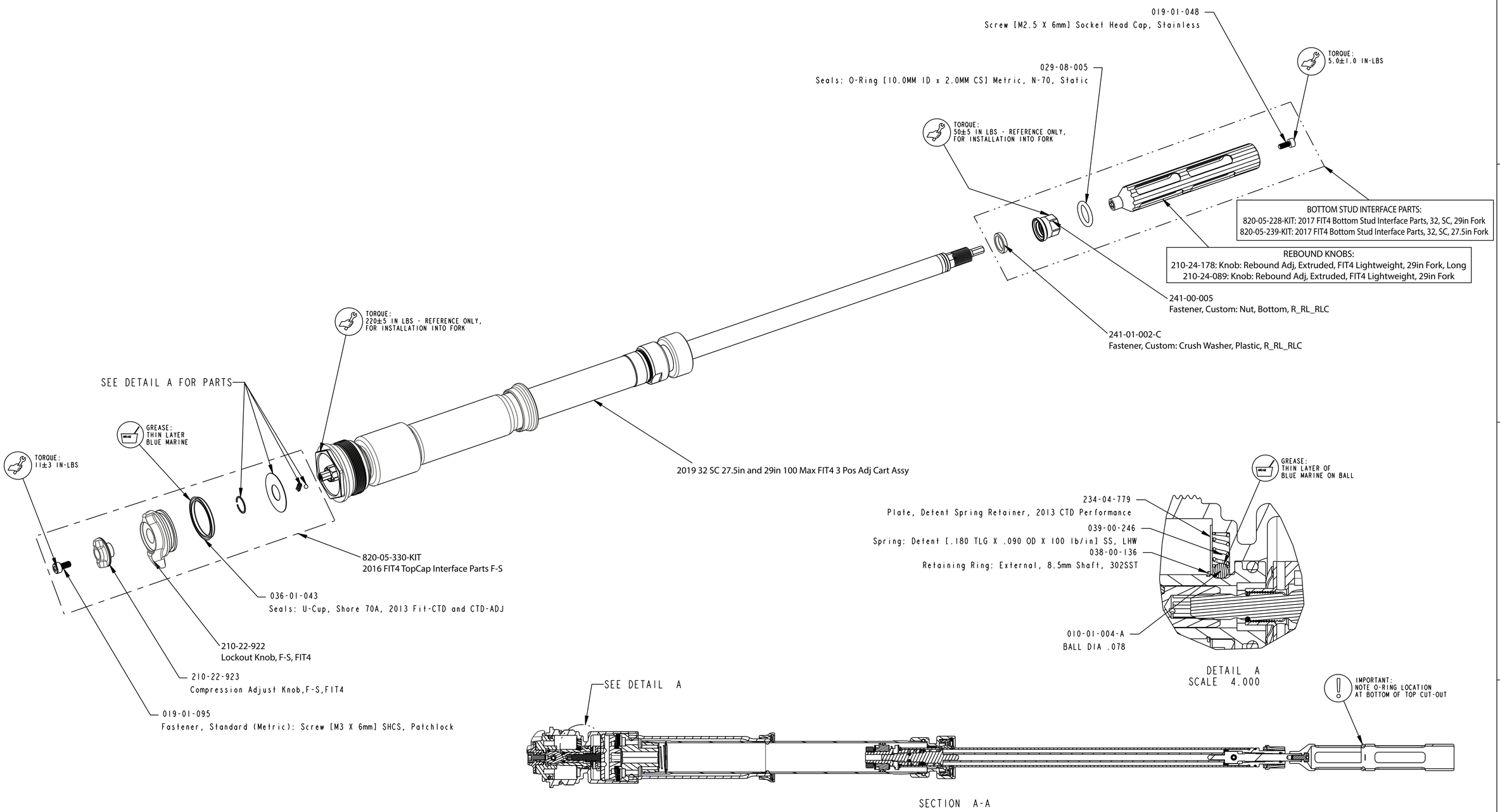

FOX Factory, Inc.
130 Hangar Way, Watsonville, CA 95076 USA
Ph 831-768-1100
Fax 831-768-9312

TITLE
2019 32 SC 100 Max FIT4, 3-Pos Adj, Cartridge Assemblies Complete

SIZE D | DWG.NO.

PLOT SCALE 1.00:1 | SHEET 1 OF 1

- PROPRIETARY -
THIS DOCUMENT CONTAINS CONFIDENTIAL, PROPRIETARY INFORMATION THAT IS FOX PROPERTY. DO NOT DISCLOSE TO OR DUPLICATE FOR OTHERS EXCEPT AS AUTHORIZED BY FOX.